DESIGN AND CONSTRUCTION STANDARDS FOR LAND DEVELOPMENT

ADOPTED BY RESOLUTIONS OF THE TOWN BOARD
LAST REVISED ON DECEMBER 18, 2023

300 STATE STREET, ROCHESTER, NEW YORK 14614 (585) 454-6110

TOWN OF VICTOR, ONTARIO COUNTY, NEW YORK
DESIGN AND CONSTRUCTION STANDARDS FOR LAND DEVELOPMENT

TABLE OF CONTENTS

Section 1.0 General Requirements 1-1
1.1 Definitions 1-1
1.2 Requirements For Subdivision Of Land 1-1
1.3 Summary Of Procedures For Development Of Land 1-1
1.3.1 Applications And Review 1-1
1.3.2 Public Hearing And Approval 1-1
1.3.3 Electronic Format Submission Requirements 1-2
1.4 Surety 1-2
1.5 Easements 1-3
1.6 Certificates Of Occupancy And Completion 1-3
1.7 Requirements For Approval Of Dedication 1-3
1.7.1 Completion Of Construction 1-3
1.7.2 Grading 1-3
1.7.4 Monuments And Property Corner 1-3
1.7.5 Street And Traffic Signs 1-3
1.7.6 Roads And Streets 1-4
1.7.7 Record Drawings 1-4
1.7.8 Maintenance Bond / Letter Of Credit / Dual Obligee Bond Required 1-5
1.7.9 Final Release Of Funds 1-5
1.7.10 Checklist For Dedication Of Land Development Projects 1-6
1.8 Submission Requirements For Minor Subdivision Plan 1-7
1.8.1 General 1-7
1.8.2 Water Distribution System 1-8
1.8.3 Sanitary Sewer System 1-8
1.8.4 Drainage System 1-9
1.8.5 Erosion And Sediment Control 1-9
1.8.6 Roads And Streets 1-9
1.8.7 Electronic Format Submission Requirements 1-9
1.9 Submission Requirements For Sketch Plan For Major Subdivision 1-10
1.9.1 General 1-10
1.9.2 Water Distribution System 1-10
1.9.3 Sanitary Sewer System 1-11
1.9.4 Drainage System 1-11
1.9.5 Sediment And Erosion Control 1-11
1.9.6 Roads And Streets 1-11
1.10 Submission Requirements For Preliminary Plans For Major Subdivision 1-12
1.10.1 General 1-12
1.10.2 Water Distribution System 1-12
1.10.3 Sanitary Sewer System 1-13
1.10.4 Drainage System 1-14
1.10.5 Sediment And Erosion Control 1-15
1.10.6 Streets And Roads 1-15
1.10.7 Preliminary Engineering Report 1-16
1.10.8 Preliminary Drainage Report 1-17
1.11 Submission Requirements For Final Plans For Major Subdivisions 1-18
1.11.1 General 1-18
1.11.2 Water Distribution System 1-18
1.11.3 Sanitary Sewer System 1-19
1.11.4 Drainage System 1-19
1.11.5 Sediment And Erosion Control 1-19

1.11.6 Streets And Roads 1-19
1.11.7 Final Engineering Report For Major Subdivisions 1-19
1.11.8 Final Drainage Report For Major Subdivisions 1-19
1.11.9 Electronic Format Submission Requirements 1-20
1.12 Submission Requirements For Site Plans 1-21
1.12.1 General 1-21
1.12.2 Water Distribution System 1-22
1.12.3 Sanitary Sewer System 1-22
1.12.4 Drainage System 1-23
1.12.5 Erosion And Sediment Control 1-23
1.12.6 Roads And Parking Areas 1-24
1.12.7 Electronic Format Submission Requirements 1-24
Section 2.0 Design Requirements 2-1
2.1 General 2-1
2.2 References To Other Specifications 2-1
2.3 Responsibility For Design 2-1
2.4 Town Road Crossings 2-1
2.5 Water Distribution System 2-1
2.5.1 General 2-1
2.5.2 Public Water Systems 2-1
2.5.3 Individual Wells 2-2
2.6 Sanitary Sewer Systems 2-2
2.6.1 General 2-2
2.6.2 Public Sanitary Sewer Systems 2-2
2.6.3 Individual Disposal Systems 2-3
2.7 Storm Drainage Systems 2-5
2.7.1 General 2-5
2.7.2 Design Standards 2-5
2.7.3 Hydrologic Design 2-6
2.7.4 Green Infrastructure 2-7
2.7.5 Storm Sewers And Channels 2-8
2.7.6 Open Channels 2-8
2.7.7 Details Of Hydraulic Structures 2-8
2.7.8 Surcharging Of Drainage Facilities 2-8
2.7.9 Building And Lot Storm Drainage 2-8
2.7.10 Storm Water Management 2-9
2.7.11 Detention And Retention Pond Requirements 2-10
2.7.12 Stormwater Ground Recharge 2-10
2.7.13 Irondequoit Creek Watershed Stormwater Management Rpt Requirements 2-11
2.8 Erosion And Sediment Control 2-11
2.8.1 General 2-11
2.8.2 Erosion Control Plan. 2-11
2.8.3 Sediment Control 2-12
2.8.4 Steep Slopes 2-12
2.8.5 Flood Hazard Control 2-13
2.9 Roads And Streets 2-13
2.9.1 General 2-13
2.9.2 Design Standards 2-14
2.9.3 Horizontal Design Requirements 2-14
2.9.4 Vertical Design Requirements 2-15
2.9.5 Intersection Design Requirements 2-16
2.9.6 Grading And Roadside Swales 2-16
2.9.7 Islands 2-16
2.9.8 Sidewalks 2-16

2.9.9 Trees Within The Right-Of-Way 2-17
2.9.10 Street Names 2-17
2.9.11 Monuments 2-17
2.9.12 Property Corner Markers 2-17
2.9.13 Conservation Easement Markers And Boundary Pins 2-17
2.9.14 Road Dedication Requirements 2-17
2.9.15 Dedication Of Existing Private Roads 2-19
2.9.16 Driveway Design Requirements 2-19
2.9.17 Street And Traffic Signs 2-20
2.9.18 Street Lighting 2-20
2.10 Fire Service Provisions , ... 2-21
Section 3.0 Construction Standards 3-1
3.1 General 3-1
3.1.1 Preliminary Matters 3-1
3.1.2 Pre-Construction Meeting 3-1
3.1.3 Inspection 3-1
3.1.4 Responsibility For Construction 3-1
3.1.5 Protection Of Existing Utilities And Structures 3-1
3.1.6 Permits And Traffic Control 3-2
3.1.7 Shop Drawings And Manufacturer's Information 3-2
3.1.8 Noise Control 3-2
3.1.9 Weather Conditions 3-2
3.1.10 Connection To, And Operation Of, Existing Facilities 3-3
3.1.11 Record Drawings 3-3
3.1.12 Checklist Prior To Construction Commencing For Land Development Projects 3-4
3.2 Site Preparation 3-5
3.2.1 General 3-5
3.2.2 Clearing And Grubbing 3-5
3.2.3 Layout Of Work 3-5
3.2.4 Topsoil Removal And Stockpiling 3-5
3.2.5 Erosion And Siltation Control 3-5
3.2.6 Temporary Access 3-6
3.3 Grading, Excavation And Related Work 3-6
3.3.1 Grading 3-6
3.3.2 Trench Excavation 3-6
3.3.3 Trench Width Limits 3-6
3.3.4 Separation Of Backfill Material 3-7
3.3.5 Dewatering 3-7
3.3.6 Maintenance Of Banks 3-7
3.3.7 Pipe Bedding 3-7
3.3.8 Cradle Materials 3-8
3.3.9 Special Requirements At Structures 3-8
3.3.10 Special Requirements For Building Sewers 3-8
3.3.11 Special Requirements For Appurtenant Activities 3-9
3.3.12 Stabilization Of Steep Slopes 3-10
3.4 Backfill And Embankments 3-11
3.4.1 General 3-11
3.4.2 Materials 3-11
3.4.3 Embankments And Fills 3-11
3.4.4 Trench Backfill 3-12
3.4.5 Compaction 3-13
3.4.6 Density Tests 3-14
3.4.7 Site Maintenance And Cleanup 3-14
3.5 Water Distribution System 3-14

3.6 Sanitary Sewer System 3-14
3.6.1 Materials 3-14
3.6.2 Installation Of Main Sewers, Building Sewers And Force Mains 3-19
3.6.3 Installation Of Manholes And Pumping Stations 3-20
3.6.4 Preparation Of Sewer System For Use 3-22
3.7 Storm Drainage System 3-28
3.7.1 Materials For Storm Drainage System 3-28
3.7.2 Installation Of Storm Sewers 3-31
3.7.3 Installation Of Manholes 3-32
3.7.4 Installation Of Inlets 3-33
3.7.5 Installation Of Dry Wells 3-33
3.7.6 Preparation For Use 3-33
3.8 Roadways And Streets 3-34
3.8.1 Materials 3-34
3.8.2 Concrete Testing 3-36
3.8.3 Preparation Of Subgrade 3-37
3.8.4 Foundation Course 3-37
3.8.5 Underdrain Construction 3-38
3.8.6 Pavement Construction 3-38
3.8.7 Concrete Gutters 3-40
3.8.8 Concrete Sidewalks 3-41
3.8.9 Street And Traffic Signs 3-42
3.8.10 Monuments 3-43
3.8.11 Property Corner Markers 3-43
3.8.12 Conservation Easement Markers And Boundary Pins 3-43
3.8.13 Town Road Crossings 3-44
Section 4.0 Standard Approval Conditions 4-1
4.1 Standard Approval Conditions For All Subdivisions (Major & Minor) 4-1
4.2 *Additional* Standard Approval Conditions For Major Subdivisions Only 4-4
4.3 *Additional* Standard Approval Conditions For Minor Subdivisions Only 4-5
4.4 Standard Approval Conditions For Site Plans 4-5
Section 5.0 Reserved 5-1
Section 6.0 Standard Details 6-1

Appendix A Native Plant Manual A-1

INTRODUCTION

These Standards have been prepared to provide guidelines for, and control over, the development of land within the Town of Victor, Ontario County, New York.

The intent is to assure proper design and construction of facilities which will be dedicated to the Town, and to assure that development is compatible with the long range development plans of the Town.

It is the intent of these Standards to conform with the Code of the Town of Victor or general control of development by the Town Board and Planning Board, and it is intended to supplement such policies by providing the technical details necessary to carry out general policy.

These Standards do not include control over building design or construction. These matters are covered elsewhere by Victor Town Code.

These Standards are divided into six Sections as follows:

Section 1 is entitled General Requirements which deals with general procedures. The intent is to provide a guide which will assist in expeditious approval of development plans and completed works which are to be dedicated to the Town.

Section 2 is entitled Design Standards and provides a guide for Developers' Engineers in the preparation of plans and other information for the development of land.

Section 3 is entitled Construction Standards and provides the construction specifications. Developers and their Engineers are responsible that their Contractors follow these Specifications in constructing dedicated facilities.

Section 4[1] is entitled Standard Approval Conditions and provides a list of conditions typically included by the Planning Board in approving subdivisions and site plans.

Section 5 is reserved for future use.

Section 6 is entitled Standard Details and provides detail drawings that supplement the Construction Standards.

REVISION HISTORY

Originally developed by Sniedze Associates
Revised by LaBella Associates:

December 14, 2009	March 28, 2011	March 12, 2012	March 11, 2013
January 27, 2014	May 22, 2017	January 22, 2018	October 15, 2019
April 11, 2022	May 22, 2023		

SECTION 1.0 GENERAL REQUIREMENTS

SECTION 1.0 GENERAL REQUIREMENTS

In the event of a contradiction between these Design and Construction Standards and the applicable sections of the Town Code, including, but not limited to Section 184, “Subdivision of Land,” and Section 211, “Zoning,” the Town Code shall apply.[2]

1.1 DEFINITIONS

The terms used in these Design and Construction Standards are defined in the Code of the Town of Victor and have the meanings assigned to them in the Code.

1.2 REQUIREMENTS FOR SUBDIVISION OF LAND

Whenever any subdivision of land is proposed, before any permit for the erection of a permanent building in such proposed subdivision is granted, and before any subdivision plat may be filed in the office of the Ontario County Clerk, the subdivider or his authorized agent shall apply for and secure approval of such proposed subdivision in accordance with the procedures established by the Town.

The Planning Board, when reviewing a minor subdivision may waive, at its discretion, any part of these procedures. However, the Planning Board requires as a minimum the submission of a minor subdivision plan which shall indicate the subdivider's plans for the ultimate disposition of his land.

1.3 SUMMARY OF PROCEDURES FOR DEVELOPMENT OF LAND

1.3.1 APPLICATIONS AND REVIEW

The Developer shall file applications on forms provided by the Secretary to the Planning Board, pay any application fees and submit information required for each phase of the review process. All required forms and information must be submitted to the Secretary to the Planning Board within the time specified in the Town Code.

The application and review process for Major Subdivisions includes the following phases:

1. Sketch Plan Review
2. Preliminary Plan Review
3. Final Plan Review

The application review process for Minor Subdivisions and for Site Plans is a one step process.

Sections 1.8 through 1.12 include checklists for each phase of review to be used as a guide by the Developer's Engineer in preparing the information required for the application review process. The Developer's Engineer is directed to the text of the Design and Construction Standards for specific design requirements.

1.3.2 PUBLIC HEARING AND APPROVAL

Upon receipt of a completed application, the Planning Board will hold a public hearing on the proposed project.

All subdivisions are referred to the Ontario County Planning Board for review and recommendation pursuant to provisions of the Subdivision Regulations.

After the Developer submits all required information, complies with all review comments and meets all other requirements, the final plan may receive Planning Board approval.

1.3.3 ELECTRONIC FORMAT SUBMISSION REQUIREMENTS

Effective January 1, 2004, approved subdivision maps, including utilities, utility easements, conservation easements, lot consolidations, lot line adjustments and record drawings shall be submitted in electronic format. This format shall be AutoCAD 2002 or latest version, in "dwg" file format, with viewports open and in the same layers as the approved drawings. Provide file in the “State Plane Central” coordinate system.[3]

Developer's Engineer electronic data notice may be included on the digital CADD file. The Town acknowledges that the electronic files were prepared for use in connection with Developer's specific project, and assumes responsibility in using this information to update Town maps.[4]

1.3.3.1 Electronic Files for Approved Plans

Two (2) sets of electronic files showing the information on the approved drawings for Administrative Subdivisions, Minor Subdivisions, Finals Plans and Site Plans shall be submitted along with the film original(s) to the Town.[5]

1.3.3.2 Electronic Files of Record Drawings

Before the Town releases all funds remaining in the surety posted for construction, electronic files of approved record drawings shall be submitted along with five (5) paper copies to the Town Engineer.[6,7]

1.4 SURETY

The Developer shall submit to the Town a detailed cost estimate of the facilities to be constructed. Surety shall be provided in favor of the Town in the amount determined by the Town, and shall include sufficient funds for construction of all dedicated facilities, all drainage facilities, erosion and sedimentation control, and other items as determined by the Town. Developer shall provide a separate construction and administration inspection fee directly to the Town, in the amount of 4% of the value of the “construction cost plus contingencies”. Developer to provide 50% of the total value prior to pre-construction meeting, 25% at the time of the first building permit application, and 25% at the time of surety close-out.[8,9]

For private development projects with no dedicated infrastructure, the engineer's estimate should include, at a minimum, drainage facilities, erosion and sedimentation control, the full value of any retaining wall, and restoration for the entire site. Restoration may be considered as topsoil and permanent seeding in lieu of pavement.[10]

Developers Assurance, in the amount of 10% of the construction cost plus contingencies, shall be included in the surety amount for dedicated facilities.[11] The Developers Assurance will be reduced when the maintenance bond is provided (upon dedication).[12]

Sureties acceptable to the Town include letter of credit or escrow account.

To the extent applicable, Sections 184-14C(9)(f) and (g) of the Code of the Town of Victor shall apply.[13]

Incremental releases are subject to retainage, as described in Town Code Section 184-14(C)(9)(e).[14]

1.5 EASEMENTS

The Developer shall provide permanent easements to the Town for dedicated facilities located outside dedicated Town road rights-of-way. Easements shall also be provided for storm sewers, drainage swales, stormwater management facilities, channels and streams on private property, and conservation easements.

Easements shall be prepared prior to the approval of the final subdivision plat. The Developer is responsible for preparation of easement descriptions and maps, transfer of the easements to the Town, and recording in the Ontario County Clerk's Office.

The Town reserves the right to require easements for anticipated future facilities and roads, where in the opinion of the Town such easements are necessary for planning future development of adjacent land.

1.6 CERTIFICATES OF OCCUPANCY AND COMPLETION

Certificates of Occupancy shall not be issued until the binder course is placed on all dedicated and private roads. Where sidewalks are part of the improvements, the Certificate of Occupancy shall not be issued until sidewalks are constructed in the area affected by such certificate.

Certificate of Completion shall be issued only after completion and acceptance of dedicated utilities, grading, drainage systems and erosion control.

1.7 REQUIREMENTS FOR APPROVAL OF DEDICATION

1.7.1 COMPLETION OF CONSTRUCTION

Construction of all facilities to be dedicated shall be fully completed by the Developer, and inspected and found satisfactory by the Town.

1.7.2 GRADING

Final grading and seeding shall be completed within the right-of-way and all excess excavated material shall be removed from the site.

1.7.3 MANHOLES

All manholes shall have a drop of less than 30” to the top of the first step from the rim.[15]

1.7.4 MONUMENTS AND PROPERTY CORNER [16]

Monuments shall be set in the required locations as shown on the final subdivision plat approved by the Planning Board, and shall be on the record drawings. All permanent property corner markers shall be in place for each lot. Conservation easement markers shall be shown on the final subdivision plat, but will be installed when each lot is developed.[17]

1.7.5 STREET AND TRAFFIC SIGNS

All street and traffic signs shall be set in their designated locations.

1.7.6 ROADS AND STREETS

Binder course for all road and streets offered for dedication shall stand over one winter season prior to application of top course.[18]

Any agreement to maintain a road or street prior to dedication shall be developed in conjunction with the Town Highway Superintendent, subject to review by the Attorney for the Town and approval of the Town Board.

1.7.7 RECORD DRAWINGS

Record drawings shall be prepared by the Developer's Engineer for all dedicated facilities and public & private underground utilities. Record drawings submitted for review shall be submitted in electronic format in accordance with Section 1.3.3. Review set shall include one (1) set of electronic files and one (1) set of paper prints. If the Town Engineer recommends revisions to the submitted plan, the Developer's Engineer shall revise the record mapping and resubmit one (1) set of electronic files and one (1) set of paper prints for further review. Continue the resubmittal process until record mapping approval is obtained from the Town Engineer.[19],[20] Comply with any Monroe County Water Authority requirements for record drawings of water system improvements.

Following approval by the Town Engineer, record drawings for minor subdivisions shall include one (1) set of electronic files and four (4) paper prints and shall be submitted as final to the Town. Record drawings for major subdivisions and commercial development projects shall include two (2) sets of electronic files and five (5)[21] paper prints and shall be submitted as final to the Town.[22]

1. Provide surveyed location and name for all storm and sanitary sewer manholes, structures, and end sections. Annotate manhole diameters and structure sizes. Show elevation to the nearest hundredth of a foot for:
   a. Manhole rims
   b. Inverts of every gravity sewer, storm sewer pipe, and force main connections to manholes
   c. Lift station top of slab, bottom of wet well, influent pipe invert, and control set points.

2. Mark each storm and sanitary main with the size, type of material, length, and percent slope.

3. Show surveyed location and significant elevations of drainage swales and other key surface features and elevations.

4. Annotate the size, material, and location of all water mains, services, valves, curb stops and hydrants including a minimum of three swing ties from permanent structures to valves, curb stops and hydrants.

5. Show surveyed location of sanitary sewer clean-out, storm lateral clean-out and water service curb box at the right-of-way line or back of public easement for each individual lot.

6. Any other significant information necessary for the future operation or maintenance of any system by the Town.

7. Show and annotate all rights-of-way, property lines and easements.

8. Show surveyed location of Monuments, including a minimum of three swing ties, annotate as SET MON.

9. Show surveyed location of pins. Annotate pin as SET PIN.[23]

10. Show surveyed location line work and annotation indicating as-built horizontal and vertical centerline geometry of the roadway plan and profile for all newly constructed roadways. Record drawing and profile shall be labeled in the same manner as the approved plan and profile. This plan and profile will be used to verify that the new roadway was constructed within the tolerance per the approved plans.

11. Surveyed locations and description of all street and traffic signs including MUTCD sign face, designation number and size.

12. Provide the electronic CSV file for all survey locations of surface features. CSV file shall include: Point number, Northing, Easting, Elevation and description.[24]

13. Depict the location of approved conservation easement areas. Drawings shall note, "Conservation easement markers to be installed when individual home sites are developed."[25]

1.7.8 MAINTENANCE BOND / LETTER OF CREDIT / DUAL OBLIGEE BOND REQUIRED[26]

A two-year letter of credit, a two-year maintenance bond, or a two-year dual obligee maintenance bond shall be provided in accordance with the Code of the Town of Victor Sections 184-14C(9)(f) and (g) with respect to all improvements being offered to the Town of Victor for dedication. Maintenance Bonds shall be written by a surety licensed to do business in New York State.

Water system improvements dedicated to the Monroe County Water Authority will not be included in the maintenance bond / letter of credit / dual obligee bond. The MCWA maintains a one-year warranty covering water system improvements.[27]

1.7.9 FINAL RELEASE OF FUNDS

The Town Board will decide whether to accept dedication of any improvements and will authorize a release of funds in accordance with the Code of the Town of Victor Sections 184-14C(9)(f) and (g). To the extent the Town authorizes a partial release of funds, such release shall not be construed as acceptance of any work by the Town.

Following receipt of an acknowledgment from the Monroe County Water Authority that water supply improvements are complete, funds associated with the water portion of the surety may be released, including the portion related to the Developer's Assurance.[28]

If the required improvements are not completed within the period established or extended by the Town, the surety may be declared in default and the Town may collect the amount payable thereunder. Upon receipt of such amount, the Town shall complete such improvements as were covered by surety and are commensurate with the extent of building development which has taken place in the subdivision, however, not exceeding in cost the amount collected upon the surety.[29]

1.7.10 CHECKLIST FOR DEDICATION OF LAND DEVELOPMENT PROJECTS

		DATE
1.	Construction of All Dedicated Utilities Completed	_____
2.	Testing of All Dedicated Utilities Completed	_____
3.	Notify NYSDEC of Sanitary Sewer Completion	_____
4.	New York Board of Fire Underwriters Certificate for Pumping Station	_____
5.	Construction of Dedicated Roads Completed	_____
6.	Grading & Seeding of R-O-W Completed	_____
7.	Construction of All Drainage Facilities Completed	_____
8.	Stormwater Control Facility Maintenance Agreement	_____
9.	Utility Easements & R-O-W Descriptions Received from Developer	_____
10.	Monuments & Property Corner Markers Set	_____
11.	Street & Traffic Signs Placed	_____
12.	Trees & Landscaping Completed	_____
13.	Record Drawings Completed by Developer	_____
14.	Operation & Maintenance Manuals for Pumping Stations and Control Vaults Provided by Developer	_____
15.	Review and approval of Roads by Town Highway Superintendent	_____
16.	Review and approval by Town Water/Sewer Superintendent of	_____
	Sanitary Sewer System	_____
	Storm Sewer System	_____
17.	Maintenance Bond / Letter of Credit / Dual Obligee Bond Posted[30]	_____
18.	Final Release Approved by Town Board[31]	_____
19.	Town Board Resolution Accepting Dedicated Facilities	_____

1.8 SUBMISSION REQUIREMENTS FOR MINOR SUBDIVISION PLAN

Minor Subdivision review is a one step process. The information required on the Minor Subdivision Plan is contained in the Design & Construction Standards. This checklist is provided for information only.

1.8.1 GENERAL

1. Plan size not more than 34" x 44".
2. Scale not less than 1" = 100'.
3. Name, address and signature of Owner.
4. Subdivision name.
5. Name, address, seal and signature of Engineer or Surveyor who prepared plan. SWPPP preparation and stormwater management designs (such as grading and utility plans) must be prepared in accordance with the requirements of the most recent NYS DEC SPDES General Permit for Stormwater Discharges from Construction Activity.[32]
6. North arrow, date and location map.
7. Property boundaries including bearings and distances of proposed lots.
8. Names of Owners of adjacent lands.
9. Covenants, easements and deed restrictions affecting the proposed subdivision.[33]
10. Land features including creeks, springs and woods.
11. Ground contours for parcel and parcels adjacent to the tract to be subdivided, at intervals of not more than ten (10) feet of elevation.
12. Finished floor elevations for proposed house or building.
13. Finished grade of house 1 foot higher than pavement.
14. Zoning District.
15. Easements provided for all dedicated facilities located outside road right-of-way.
16. Easement descriptions.
17. Bearings and distances for easements shown on plan.
18. Note on Plan that Construction shall conform to the Town of Victor Standards.
19. Location of proposed project in relation to identified wetlands and to 100-year flood plain.
20. Identify lots that are suitable for walk-out basements.
21. Application for the formation of Water Benefitted Area or district extension, if necessary.[34]
22. Application for the formation or extension of a Sewer District, if necessary.[35]
23. Tax Map available from Ontario County Real Property Services with property proposed for subdivision outlined and with adjoining property owners shown.[36]

1.8.2 WATER DISTRIBUTION SYSTEM

1.8.2.1 Public Water Supply

1. Location and size of water mains, including nearest hydrant.
2. Location, size and material of proposed water service.
3. All other requirements in accordance with Monroe County Water Authority Uniform Design and Construction Standards for Extending Water Distribution Systems, Section 2.09.02.[37]

1.8.2.2 Private Water Supply

1. Location of wells, including yield and potability analysis.
2. Note indicating well to be sampled for adequate quantity and required quality and that a laboratory report be furnished to the Town before a building permit is issued.
3. Minimum required separation distances between well and subsurface sewage disposal systems and property lines.

1.8.3 SANITARY SEWER SYSTEM

1.8.3.1 Individual Subsurface Disposal Systems

1. Percolation and deep hole test results certified by Licensed Professional Engineer or Licensed Surveyor.
2. Locations for two (2) percolation tests and a deep hole shown on plan for each proposed absorption field.
3. Percolation tests and deep holes used for design shall be witnessed by the representative of the Town Engineer.
4. Sewage disposal system including design data and construction details, evaluation of soil and groundwater conditions as specified in Section 2.6.3 unless determined by Town Engineer that groundwater protection assessment is not required.
5. Design of sewage disposal system should include basis of design, critical inverts for septic tank, distribution box and ends of leachlines and size of septic tank.
6. Garbage grinders require additional 250 gallons of septic tank capacity and 7 square feet of surface area.
7. Additional 50% of required absorption field area provided for expansion and replacement and shown on Plan.
8. Separation distance of four (4) feet provided between the bottom of the absorption field trench and seasonal high groundwater, bedrock or impervious layer.
9. Minimum horizontal separation distances for subsurface sewage disposal systems required by the NYS Department of Health.
10. Note included on plan that construction of the sewage disposal system shall be inspected and certified by the Design Engineer.

11. An area 10 feet beyond all sides of the absorption field indicated to be kept free of trees.
12. Cleanouts for building sewer laterals provided every 100 feet and at horizontal bends.
13. Approximate locations of existing sewage disposal system and water supply for parent parcel.
14. Certification by Licensed Engineer that existing sewage disposal system is functioning.

1.8.3.2 Public Sanitary Sewer System

1. If connections to existing public sewers are proposed, all requirements of the Design and Construction Standards regarding sanitary sewers shall apply.
2. Plan shall include location, size, and material of sanitary sewer lateral.

1.8.4 DRAINAGE SYSTEM

1. Drainage Study Map.
2. Grading plan including existing and proposed contours at intervals of not more than two (2) feet.
3. Drainage easements provided for storm sewers and inlets not located in right-of-way, detention facilities, and swales or streams that carry uphill drainage across downhill lots.
4. Stormwater Control Facility Maintenance Agreement.

1.8.5 EROSION AND SEDIMENT CONTROL

1. Erosion control plan showing locations and details of erosion control measures.
2. Swales and turf-lined channels have slope not less than 1%.
3. The requirements of the NYSDEC SPDES General Permit for Stormwater Discharges from Construction Activities including a Stormwater Pollution Prevention Plan and Notice of Intent shall be met for all developments disturbing more than one (1) acre.

1.8.6 ROADS AND STREETS

1. Adjacent roads including rights-of-way, ditches, culverts and pavement.
2. Driveways including sight distances.
3. Maximum driveway grade not to exceed 10%.
4. Adequate foundation course provided for driveway to support emergency vehicles where driveways exceed 200 feet in length or have a non-linear alignment. Vehicle turnaround also provided.
5. Monumentation consisting of iron pins for site boundary indicated on the plan.

1.8.7 ELECTRONIC FORMAT SUBMISSION REQUIREMENTS

After approval, Minor Subdivision Plans, including utilities, utility easements, conservation easements, lot consolidations and lot line adjustments shall be submitted in electronic format, as required by Section 1.3.3.

1.9 SUBMISSION REQUIREMENTS FOR SKETCH PLAN FOR MAJOR SUBDIVISION

The Sketch Plan is an informal schematic presentation of existing features and of proposed development, and shall provide the following information:

1.9.1 GENERAL

1. Plan size not more than 34" x 44".
2. Scale not less than 1 " = 100'.
3. Name or title of proposed project.
4. Name, address, seal and signature of Professional Engineer or Licensed Surveyor who prepared plan.
5. Name and address of subdivider or developer.
6. Written, clear statement of subdivider's intent.
7. North arrow, graphic scale, date and general location map.
8. Tax Map available from Ontario County Real Property Services with property proposed for subdivision outlined and with adjoining property owners shown.
9. Aerial photograph available from Ontario County Real Property Services with property proposed for subdivision outlined at a scale of 1" = 1000' or larger.
10. Ground contours for parcel and parcels adjacent to the tract to be subdivided, at intervals of not more than ten (10) feet of elevation.
11. All pertinent topographic features within site and the adjoining tract, including existing buildings, watercourses, water bodies, swamps and wooded areas. Features to be retained and to be removed shall be so indicated.
12. If the subdivider intends to develop the tract in stages, the entire tract shall be shown, with anticipated stages and time schedule indicated. All other lands contiguous to the proposal owned by the subdivider shall be shown on the map with approximate area.
13. Zoning district within the tract and any other legal restrictions of use.
14. Names of owners of adjacent lands and names of adjacent subdivisions.
15. Location of proposed project in relation to identified wetlands and to 100-year flood plain.

1.9.2 WATER DISTRIBUTION SYSTEM

1. Schematic plan of water system and proposed source of water supply.
2. All other requirements in accordance with Monroe County Water Authority Uniform Design and Construction Standards for Extending Water Distribution Systems, Section 2.09.02.[38]

1.9.3 SANITARY SEWER SYSTEM

1.9.3.1 Individual Subsurface Sewage Disposal System

1. Engineer's preliminary report on soil and groundwater conditions, as specified in Section 2.6.3., based on percolation and deep (minimum six[39] foot depth) test pit results. Percolation test and deep test pit data must be provided in number and at locations such that at least one percolation test and deep test pit is located within a 200 foot radius of each on-site sewage disposal system proposed.
2. Schematic plan of subsurface sewage disposal system

1.9.3.2 Public Sanitary Sewer System

1. Schematic plan of sanitary sewer system

1.9.4 DRAINAGE SYSTEM

1. Drainage study map with schematic plan of proposed system for storm water drainage.

1.9.5 SEDIMENT AND EROSION CONTROL

1. Schematic plan of proposed system for sediment and erosion control.

1.9.6 ROADS AND STREETS

1. Proposed street lines, lot lines, easements, and areas to be dedicated.

1.10 SUBMISSION REQUIREMENTS FOR PRELIMINARY PLANS FOR MAJOR SUBDIVISION

In addition to the requirements of Sketch Plan, the following information shall be provided:

1.10.1 GENERAL

1. If more than one sheet is required to show entire project, an index map shall be provided.
2. Scale not less than 1"= 50'.[40]
3. Property boundaries including bearings and distances.
4. Existing culverts, water mains, storm sewers and sanitary sewers nearby and within the development, with their location, size, type and approximate elevation and gradients.
5. The approximate lines of proposed lots, the acreage contained in each lot and lot numbering.
6. The approximate lines and purposes for all proposed dedicated public and private facility and utility easements. [41]
7. The approximate location and dimensions of areas proposed for parks, playgrounds or other permanent open space.
8. The location of any municipal boundary, existing special district lines and existing zoning and zoning district lines within the tract.
9. Indications of any potentially nonconforming lots, showing required and actual area, yards and setbacks.
10. Typical lot layout if utility services not shown for each lot.
11. Finished Floor elevations for each proposed house or building.
12. Identify lots that are suitable for walk-out basements.
13. Agricultural Data Statement for subdivisions occurring on property within an agricultural district containing a farm operation or on property with boundaries within five-hundred (500) feet of a farm operation located in an agricultural district. (Pursuant to Section 305-a of the Agricultural and Markets Law).[42]

1.10.2 WATER DISTRIBUTION SYSTEM

1.10.2.1 Public Water Supply

1. Location and size of existing water main including nearest hydrant.
2. Proposed source of water supply and preliminary plan of water system including water main sizes and hydrant locations.
3. Location, size and material of proposed water services.
4. All other requirements in accordance with Monroe County Water Authority Uniform Design and Construction Standards for Extending Water Distribution Systems, Section 2.09.02.[43]

1.10.2.2 Private Water Supply

1. Location of wells, including yield and potability analysis.

2. Note indicating well to be sampled for adequate quantity and required quality and that a laboratory report be furnished to the Town before a building permit is issued.

3. Note requiring that the well driller's report, in the form required by the Town, be submitted to the Town before a building permit is issued.

4. Minimum required separation distances between well and subsurface sewage disposal systems and property lines.

1.10.3 SANITARY SEWER SYSTEM

1.10.3.1 Individual Subsurface Sewage Disposal Systems

1. Sewage disposal system including design data and construction details, evaluation of soil and groundwater conditions as specified in Section 2.6.3 unless determined by Town Engineer that groundwater protection assessment is not required.
2. Percolation and deep hole test results certified by Licensed Professional Engineer or Licensed Surveyor.
3. Locations for two (2) percolation tests and a deep hole shown on plan for each proposed absorption field.
4. Percolation tests and deep holes used for design shall be witnessed by the representative of the Town Engineer.
5. Design of sewage disposal system should include basis of design, critical inverts for septic tank, distribution box and ends of leach lines and the size of septic tank.
6. Garbage grinders require additional 250 gallons of septic tank capacity and 7 square feet of surface area.
7. Additional 50% of required absorption field area provided for expansion and replacement, and shown on Plan.
8. Separation distance of 4 feet required between the bottom of the absorption field trench and seasonal high groundwater level, bedrock and impervious layer. Separation distance shall be shown on Typical Trench Detail.
9. Minimum separation distances for subsurface sewage disposal systems conform to NYS Department of Health requirements.
10. Note included on the plan that the construction of the sewage disposal system shall be inspected and certified by the Design Engineer.
11. An area 10 feet beyond all sides of the absorption field indicated to be kept free of trees.
12. Cleanouts for building sewer laterals provided every 100 feet and at horizontal bends.
13. Locations of existing sewage disposal systems and water supply shown for parent parcel and adjacent lots.

14. Certification provided by Licensed Engineer that the existing sewage disposal system is functioning.

1.10.3.2 Public Sanitary Sewer System

1. Plans and profiles shall show manhole stationing, size of sewers, surface and invert elevations at manholes, grade of sewers between adjacent manholes, and details of all standard and special appurtenances and structures.
2. Sanitary sewers shown at sufficient depth to provide service to basements.
3. Sanitary manholes placed not more than 300 feet apart.
4. Vertical separation distance of 2 feet provided between parallel sanitary sewers and storm sewers to provide clearance for crossing of building sewer and drains.
5. Location and size of proposed sanitary sewer lateral.
6. Provide plans, section, and details for sanitary pump stations.[44]

1.10.4 DRAINAGE SYSTEM

1. Drainage Study Map.
2. Plan of storm drainage system.
3. Calculations for sizing of storm sewers, culverts, and channels.
4. Storm sewer manholes placed not more than 300 feet apart.
5. Runoff calculations for the undeveloped site based on a 10-year storm frequency.
6. Runoff calculations for the developed site based on a 10-year storm frequency.
7. Calculations for determination of storage volume required.
8. Storage volume provided.
9. Design high water level elevations for storm frequencies being evaluated.
10. Controlled outlet structure provided for design year flows.
11. Anti-vortex device and trash rack provided for outlet structure.
12. Outlet pipe sized to handle flows in excess of design flows.
13. Calculations for flow through outlet structure that shows a gradual release in flow from the pond not to exceed the existing flow.
14. Controlled overflow provided for flows in excess of design storm flows.
15. Calculations should be provided for the sizing of weir, trickle tube, and the inlet and outlet pipes for the outlet structure.
16. Invert elevations for the inlet and outlet pipes, orifices and top of the outlet structure and the elevation of the overflow spillway.
17. Minimum 3 feet of freeboard provided above design high water level.
18. Controlled overflows using emergency spillways designed with spillway crest no less than 2 feet below top of pond embankment and 1 foot above design high water level.

19. Cross-section through detention pond from inlet to outlet including the elevation of the top of embankment and design high water level.
20. Concrete gutter provided in pond bottom to carry low flows.
21. Pond embankments minimum side slope of 1V:3H
22. Seepage control collars provided for piping through pond embankment.
23. Evaluation of the effect of flows in excess of design flows on detention facility and outlet structure.
24. Evaluation of the downstream facilities to determine if the existing facilities have sufficient capacity to accept the anticipated concentrated flows from the proposed project.
25. SWPPP preparation and stormwater management designs (such as grading and utility plans) must be prepared in accordance with the requirements of the most recent NYS DEC SPDES General Permit for Stormwater Discharges from Construction Activity.[45]

1.10.5 SEDIMENT AND EROSION CONTROL

1. A preliminary grading plan of the site, showing locations and approximate size of cuts and fills and cross sections for any final grading steeper than three (3) horizontal to one (1) vertical.
2. A tracing overlay showing soils and their classification and those areas, if any, with moderate to high susceptibility to erosion. For areas with potential erosion problems, the developer shall also include a description and outline of existing vegetation.
3. Preliminary erosion control plan including details of standard and special structures.
4. Rip rap provided at the ends of storm sewers where discharge is into swales, turf-lined channels and detention pond.

1.10.6 STREETS AND ROADS

1. Existing street immediately adjoining and within the development and the distance to the nearest major street intersection.
2. The approximate lines and grades of proposed streets and sidewalks, and the names of the proposed streets.
3. Maximum grade of 8% for local streets. Refer to appropriate sections of the Design and Construction Standards for additional information regarding design.
4. Turnarounds provided at temporary dead ends of subdivision roads.[46]
5. Sight distances indicated.
6. Driveway locations shown.
7. Maximum driveway grade not to exceed 10%.
8. Adequate foundation course for driveway to support emergency vehicles provided for proposed driveways which exceed 200 feet in length or have a non-linear alignment. Vehicle turnarounds also provided.
9. Street and traffic sign locations shown.[47]

10. Crosswalk and pavement striping shown.[48]
11. Profiles of proposed streets.[49]
12. Intersection Lighting.[50]

1.10.7 PRELIMINARY ENGINEERING REPORT

A preliminary engineering report is required as part of the preliminary plan review for all major subdivisions and shall include as a minimum the following information:

1. Basic project information including total acreage, number of lots, minimum lot size, estimated population, phasing of project, and general description of proposed development.
2. If private wells are proposed, supplementary data relative to water supply and test wells shall be provided and certified by the Developer's Engineer.
3. Sanitary sewer system preliminary design including estimated flows, summary of design data, and evaluation of soil and groundwater conditions as specified in Section 2.6.3.
4. For development proposing a dedicated sanitary pump station, the Engineering Report shall include:[51]
    1. Anticipated flow rates (initial and full build out): Average Day, Maximum Day, Day Peak Hour
    2. Number of parcels served
    3. Total static head
    4. Total dynamic head (TDH)
    5. Operating set points
        a. Pump Off
        b. Lead Pump On
        c. Lag Pump On
    6. High Level Alarm
    7. High point in force main
    8. Elevation at force main discharge
    9. Flow capacity of force main from high point to end under gravity flow conditions
    10. Wet well sizing calculations
    11. Net positive suction head required
    12. Net positive suction head available
    13. System curve
    14. Pump performance point
    15. Anticipated storage time based on average and peak flows including corresponding liquid level elevations related to the lowest floor

16. Anticipated cycle times per hour (initial and full build out)
    a. Cycle times to be between one (1) start per hour minimum and ten (10) starts per hour minimum.
17. Map of design service area and any other lands that are tributary to the pump station
18. Demonstrate the ability of the pump station to be upgraded for future expansion
19. Need for odor control
20. Power requirements
21. Velocity in force main at pump design point, 2.0 fps (minimum)
22. Retention time in force main based on pump cycle time and design point.
23. Emergency power supply
24. Compliance with the current policies and directives of the New York State Department of Environmental Conservation, New York State Health Department, and applicable sections of the "Recommended Standards for Wastewater Facilities," latest revision.
25. Power supply voltage and phasing.

1.10.8 PRELIMINARY DRAINAGE REPORT

A preliminary drainage report is required as part of the preliminary drainage plan for all major subdivisions and for other projects when necessary in the opinion of the Engineer for the Town, and shall include as a minimum the following information:

1. Run-off calculations from the undeveloped site and from the developed site.
2. Storm sewer, culvert and channel sizing, showing the basis of design.
3. Intended method of storm water disposal.
4. Erosion control plan including run-off control measures during grading and construction to limit erosion and sedimentation.
5. Design of storm water detention facilities.
6. Stormwater Management Report is required for all projects which are located within the Irondequoit Creek Watershed and exceed the specified thresholds.
7. A Preliminary Stormwater Pollution Prevention Plan is required for all projects disturbing more than one (1) acre in accordance with the NYSDEC SPDES General Permit for Stormwater Discharges from Construction Activity.

1.11 SUBMISSION REQUIREMENTS FOR FINAL PLANS FOR MAJOR SUBDIVISIONS

Final subdivision plans shall include the following separate sheets:

1. Subdivision Plat Record Plan.
2. Grading and Drainage Plan.
3. Utility Plan.
4. Landscaping Plan.
5. Street Lighting Plan.

In addition to the requirements for Sketch Plan and the Preliminary Plans, the following information shall be provided on the Final Plans:

1.11.1 GENERAL

1. Name, address and signature of owner of record.
2. The layout of proposed lots, including lot numbers and acreage of each lot.
3. Location of all proposed buildings.
4. Grading plan showing existing and proposed contours at intervals of not more than two (2) feet.
5. Landscaping plan for street trees, including varieties and minimum size, and existing trees to be preserved.
6. Street lighting plan showing location of street lighting fixtures.
7. Easements provided for all public and private dedicated facilities and utilities located outside road right-of-way.[52]
8. Bearings and distances for easements shown on plan.
9. Plans submitted to NYSDOT and NYSDEC for comments, if required.
10. Application for the formation of Water Benefitted Area or District Extension[53], if necessary.
11. Application for the formation or extension[54] of Sewer District, if necessary.
12. Monuments and property corner markers shown on plan.

1.11.2 WATER DISTRIBUTION SYSTEM

1.11.2.1 Public Water Supply

1. Final Plans and details of water distribution system.
2. All other requirements in accordance with Monroe County Water Authority Uniform Design and Construction Standards for Extending Water Distribution Systems, Section 2.09.02.[55]

1.11.2.2 Private Water System

1. Final design and details for individual wells.

1.11.3 SANITARY SEWER SYSTEM

1.11.3.1 Public Sanitary Sewer System

1. Final Plans, profiles and details of sanitary sewer system.
2. Sanitary sewer system plan submitted to Town of Farmington for review and comment.

1.11.3.2 Individual Subsurface Sewage Disposal System

1. Final design and details of subsurface disposal systems.

1.11.4 DRAINAGE SYSTEM

1. Final plans, profiles and details of storm drainage system including detention facilities.
2. Drainage easements provided for storm sewers and inlets not located in right-of-way, detention facilities, and swales or streams that carry uphill drainage across downhill lots.
3. Stormwater Control Facility Maintenance Agreement.

1.11.5 SEDIMENT AND EROSION CONTROL

1. Locations and details for erosion control measures.
2. Areas disturbed by grading indicated to be re-seeded as soon as possible.

1.11.6 STREETS AND ROADS

1. Lines and grades of proposed streets.
2. Typical cross-sections of proposed streets.
3. Proposed location of monuments.
4. Easements including descriptions and dimensions.
5. Note on plan indicating that street and traffic signs shall be provided as required by the Design and Construction Standards.
6. Approval for open cut road crossings shall be obtained from Highway Superintendent. Include Town's standard detail for typical road crossing.
7. Street and traffic sign locations, size, and MUTCD designation shown.[56]

1.11.7 FINAL ENGINEERING REPORT FOR MAJOR SUBDIVISIONS

The final engineering report shall expand on the information included in the preliminary engineering report, and shall include final design computations. Any significant changes from the preliminary report shall be explained in detail.

1.11.8 FINAL DRAINAGE REPORT FOR MAJOR SUBDIVISIONS

The final drainage report shall expand on the information included in the preliminary drainage report, and shall provide the following additional information:

1. Final design data and computations of storm drainage and detention facilities.
2. Specific erosion and sedimentation control measures during construction.

3. A Stormwater Pollution Prevention Plan is required for all projects disturbing more than one (1) acre in accordance with the NYSDEC SPDES General Permit for Stormwater Drainage from Construction Activity.
4. A copy of the Notice of Intent for coverage under the NYSDEC SPDES General Permit for Stormwater Discharges from Construction Activity shall be provided.

1.11.9 ELECTRONIC FORMAT SUBMISSION REQUIREMENTS

After approval, Final Subdivision Plans, including utilities, utility easements, conservation easements, lot consolidations and lot line adjustments shall be submitted in electronic format as required by Section 1.3.3.

1.12 SUBMISSION REQUIREMENTS FOR SITE PLANS

Site Plan review is a one step process. The information required on the Site Plan is contained in the Design & Construction Standards. This checklist is provided for information only.

1.12.1 GENERAL

1. Plan size not more than 34" x 44".
2. Scale 1" = 20', if feasible.
3. Name, address and signature of Owner
4. Project name.
5. Name, address, seal and signature of Engineer or Surveyor who prepared plan. SWPPP preparation and stormwater management designs (such as grading and utility plans) must be prepared in accordance with the requirements of the most recent NYS DEC SPDES General Permit for Stormwater Discharges from Construction Activity.[57]
6. North arrow, date and location map.
7. Zoning District.
8. Property boundaries including bearings and distances.
9. Names of Owners of adjacent lands.
10. Covenants, easements and deed restrictions affecting the proposed site.[58]
11. Existing features including buildings, creeks, springs and woods.
12. Grading plan showing existing and proposed contours at intervals of not more than two (2) feet.
13. Proposed building location and setback dimensions.
14. Finished floor elevations for proposed building.
15. Easements provided for all public and private dedicated facilities and utilities located outside road right-of-way.[59]
16. Easement descriptions.
17. Bearings and distances for easements shown on plan.
18. Note on Plan that Construction shall conform to the Town of Victor Standards.
19. Location of proposed project in relation to identified wetlands and to 100-year flood plain.
20. Monumentation of site boundary shown on the plan.
21. Proposed landscaping.
22. Present and anticipated future number of employees.
23. Site lighting.
24. Agricultural Data Statement for site plans occurring on property within an agricultural district containing a farm operation or on property with boundaries within five-hundred (500) feet of a farm operation located in an agricultural district. (Pursuant to Section 305-a of the Agricultural and Markets Law).[60]

1.12.2 WATER DISTRIBUTION SYSTEM

1.12.2.1 Public Water Supply

1. Location and size of water mains, including nearest hydrant.
2. Location, size and material of proposed water service.
3. All other requirements in accordance with Monroe County Water Authority Uniform Design and Construction Standards for Extending Water Distribution Systems, Section 2.09.02.

1.12.2.2 Private Water Supply

1. Location of well, including yield and potability analysis.
2. Note indicating well to be sampled for adequate quantity and required quality and that a laboratory report be furnished to the Town before a building permit is issued.
3. Minimum required separation distances between well and subsurface sewage disposal systems and property lines.

1.12.3 SANITARY SEWER SYSTEM

1.12.3.1 Individual Subsurface Disposal Systems

1. Percolation and deep hole test results certified by Licensed Professional Engineer or Licensed Surveyor.
2. Locations for two (2) percolation tests and a deep hole shown on plan for each proposed absorption field.
3. Percolation tests and deep holes used for design shall be witnessed by the representative of the Town Engineer.
4. Sewage disposal system including design data and construction details, evaluation of soil and groundwater conditions as specified in Section 2.6.3 unless determined by Town Engineer that groundwater protection assessment is not required.
5. Design of sewage disposal system should include basis of design, critical inverts for septic tank, distribution box and ends of leach lines and size of septic tank.
6. Additional 50% of required absorption field area provided for expansion and replacement and shown on Plan.
7. Separation distance of four (4) feet provided between the bottom of the absorption field trench and seasonal high groundwater, bedrock or impervious layer.
8. Minimum horizontal separation distances for subsurface sewage disposal systems required by the NYS Department of Health.

9. Note included on plan that construction of the sewage disposal system shall be inspected and certified by the Design Engineer.

10. An area 10 feet beyond all sides of the absorption field indicated to be kept free of trees.

11. Cleanouts for building sewer laterals provided every 100 feet and at horizontal bends of 45 degrees or greater.

12. Approximate locations of existing sewage disposal system and water supply for adjacent parcels.

13. Certification by Licensed Engineer that existing sewage disposal system is functioning.

1.12.3.2 Public Sanitary Sewer System

1. If connection to existing public sewers are proposed, all requirements of the Design and Construction Standards regarding sanitary sewers shall apply.

2. Plan and profile shall include location, slope, size, depth and material of sanitary sewer system.

1.12.4 DRAINAGE SYSTEM

1. Drainage Study Map.

2. Grading plan including existing and proposed condition.

3. Drainage easements provided for storm sewers and inlets not located in right-of-way, detention facilities, and swales or streams that carry uphill drainage across downhill lots.

4. Stormwater Management Report is required for projects which are located within the Irondequoit Creek Watershed and exceed the specified thresholds.

5. Stormwater Control Facility Maintenance Agreement.

1.12.5 EROSION AND SEDIMENT CONTROL

1. Erosion control plan showing locations and details of erosion control measures.

2. Swales and turf-lined channels shall have slope not less than 1%.

3. A Stormwater Pollution Prevention Plan is required for all projects disturbing more than one (1) acre in accordance with the NYSDEC SPDES General Permit for Stormwater Drainage from Construction Activity.

4. A copy of the Notice of Intent for coverage under the NYSDEC SPDES General Permit for Stormwater Discharges from Construction Activity shall be provided.

1.12.6 ROADS AND PARKING AREAS

1. Adjacent roads including rights-of-way, ditches, culverts and pavement.

2. Driveways including sight distances.

3. Maximum driveway grade not to exceed 10%.

4. Adequate foundation course provided for driveway to support emergency vehicles where driveways exceed 200 feet in length or have a non-linear alignment. Vehicle turnaround also provided.

5. Typical section of roadways and parking areas.

6. Exterior lighting.

7. Intersection Lighting.[61]

1.12.7 ELECTRONIC FORMAT SUBMISSION REQUIREMENTS

After approval, Site Plans, including utilities, utility easements, conservation easements, lot consolidations and lot line adjustments shall be submitted in electronic format, as required by Section 1.3.3.

SECTION 2.0 DESIGN STANDARDS

SECTION 2.0 DESIGN REQUIREMENTS

2.1 GENERAL

The development of land shall conform with zoning regulations established by the Town. It shall also conform with all appropriate laws, rules, and regulations established by all governing bodies having or claiming jurisdiction over various phases of the development.

Where these Standards impose greater restrictions than are imposed by the provision of any law, ordinance, regulation or private agreement, these Standards shall control. Where greater restrictions are imposed by any law, ordinance, regulation, or private agreement than are imposed by these Standards, such greater restrictions shall apply.

2.2 REFERENCES TO OTHER SPECIFICATIONS

References to other standards and specifications shall mean that the applicable portions thereof shall be followed as if the specifications were actually incorporated in these Standards. It shall be understood that such references shall be to the latest edition or revision thereof, including all addenda.

2.3 RESPONSIBILITY FOR DESIGN

Developers are responsible for providing sound engineering design of all facilities, subject to review by the Town. The design shall be prepared by a New York State licensed professional engineer and/or land surveyor experienced in the design of such facilities. Design information, engineering reports, plans and specifications shall provide the information required by these Standards and additional information that may be required by the Planning Board.

Boundary surveys shall be performed and certified by a licensed land surveyor.

All revisions to the originally submitted Plans and Reports shall be noted and dated by the Developer's Engineer on the revised Plans and Reports before they are resubmitted for further review.

2.4 TOWN ROAD CROSSINGS

Open cutting of Town roads for installation of underground utilities is not allowed unless an exception is granted by the Town Highway Superintendent.

2.5 WATER DISTRIBUTION SYSTEM

2.5.1 GENERAL

Public water supply shall be provided wherever existing water mains are reasonably accessible in the opinion of the Planning Board.

Only those developments that cannot be served by extension of public water systems may be designed with individual wells. The Developer is responsible for obtaining approval for individual wells from the NYS Department of Health.

2.5.2 PUBLIC WATER SYSTEMS

Design shall conform to the following standards supplemented and superseded by additional requirements as listed.

1. Uniform Design and Construction Standards for Extending Water Distribution Systems, by Monroe County Water Authority, available on the Internet at mcwa.com/Home/Engineering [62]

2.5.3 INDIVIDUAL WELLS

Design shall conform to the following standards supplemented and superseded by additional requirements as listed.

1. Rural Water Supply, by NYS Department of Health.

2. Where wells are proposed on lots with individual subsurface sewage disposal systems, soils data for the full depth of proposed wells and detailed plans shall be submitted to indicate how pollution of the wells will be prevented.

3. A well for a residential lot shall be developed from a water-bearing formation at a depth greater than 20 feet below the ground surface, have sustained yield of not less than 5 gallons per minute, and provide a pressure of at least 20 psi at ground level at the entry point into the house.

4. A note shall be included on the plans requiring that the well driller's report, in the form required by the Town, be submitted to the Town before a building permit is issued.[63]

5. A note shall be included on the plans requiring that wells be sampled for adequate quantity and required quality of potable water and that a laboratory report be submitted to the Town before a building permit is issued.

6. Sampling and analytical methods to determine compliance with Drinking Water Standards shall be in accordance with NYS Department of Health requirements.

2.6 <u>SANITARY SEWER SYSTEMS</u>

2.6.1 GENERAL

Public sanitary sewers shall be provided wherever existing sanitary sewers are reasonably accessible in the opinion of the Planning Board.

Only those developments that cannot be served by extension of public sanitary sewers may be designed with individual sewage disposal systems. The Developer is responsible for obtaining approval for such systems from regulatory agencies.

2.6.2 PUBLIC SANITARY SEWER SYSTEMS

Design shall conform to the following standards supplemented and superseded by additional requirements as listed:

1. Recommended Standards for Sewage Works, by Great Lakes-Upper Mississippi River Board of State Sanitary Engineers. (Ten-State Standards).

2. Materials shall be in accordance with Section 3. Construction Standards and construction shall conform to Section 6. Standard Details.

3. Manholes shall be spaced at intervals not greater than 300 feet.

4. Depths of sewers shall be sufficient to serve basements of all houses in the development.

5. The minimum inside diameter of manholes shall be 48-inches for 8" through 12" sewers and 60-inches for sewers larger than 12 inches.

6. A drop of 0.1 foot shall be provided through each manhole for all changes in horizontal alignment.

7. Building sewers shall be 4 inch diameter minimum, at a minimum slope of 1/4-inch per foot.

8. Cleanouts shall be provided for building sewers at the right-of-way or back of any public easement line, at all horizontal bends and at a maximum separation distance of 100 feet.[64]

9. A vertical separation of two (2) feet shall be provided between parallel sanitary sewers and storm sewers to provide clearance for crossing of building sewers and drains.

10. Pumping stations and force mains shall be designed to conform to Ten-State Standards, and to NYSDEC and Town of Victor requirements.

11. Pump station wet wells shall be minimum 5-foot diameter.[65]

12. Town of Farmington or Village of Victor design and construction standards, where applicable. The most stringent specifications of each municipality shall apply to the proposed improvements.[66]

2.6.3 INDIVIDUAL DISPOSAL SYSTEMS

Design shall conform to the following standards supplemented and superseded by additional requirements as listed.

1. Standards for Waste Treatment Works Institutional and Commercial Sewage Facilities, by NYS Department of Environmental Conservation.

2. Appendix 75-A, Wastewater Treatment Standards – Residential Onsite Systems (10NYCRR 75-A).[67]

3. Individual sewage disposal systems shall not be used in any development with more than 49 lots.

4. The Planning Board may require design and installation of house plumbing for future public sanitary sewer connection.

5. Two (2) percolation tests and a deep hole shall be provided within each proposed absorption field area.

6. Soils which have any percolation test results faster than 5 minutes per inch for any lots shall not be used for absorption fields and seepage pits, unless the results are evaluated and approved by the Planning Board.[68]

7. Minimum distance between the bottom of the absorption system or seepage pit and seasonal high groundwater level, bedrock or impervious layer shall be not less than 4.0 feet.

8. Seepage pits shall not be used if soil and site conditions are adequate for absorption trenches.

9. An additional 50% of the required absorption field area shall be available for future expansion and replacement. Such area shall be shown on the drawings.

10. Minimum total length of absorption trench shall be 200 feet.

11. Where percolation rates exceed 60 minutes per inch, subsurface disposal systems shall not be allowed. In extreme cases for a single lot development, where the lot size exceeds 5.0 acres and the lot dimensions allow all parts of the sewage disposal system to be located 100 feet or more from any lot line, the Developer may apply to the NYS Department of Health for approval to use an alternative system of special design.

12. Ground Water Protection Program Requirements.

    12.1. Results from percolation and deep hole tests shall be shown on the drawings and one such percolation test and deep hole test shall be performed within a 200 foot radius of each on-site sewage disposal system proposed.

    12.2. Depth to seasonal high groundwater shall be determined at the location of each deep hole test from direct measurement, from US Soil Conservation Service data, or from other published data. The source of the data must be cited in the Engineer's Report.

    12.3. The Engineer's Report shall contain an estimate of the average gradient (in percent) of the groundwater table towards (+) or away from (-) the nearest point of water use or the nearest surface water body such as a stream, pond, lake, or wetland in the vicinity of each deep test pit location. An estimate shall also be made of the distance from the deep test pit location to the nearest point of water use or nearest surface water body.

    12.4. The Engineer's Report shall address the potential for groundwater quality degradation due to subsurface sewage disposal in the vicinity of the test pit locations. This shall be done using procedures for the Soil-Site-Waste Interaction Matrix, the Surface Impoundment Assessment, and the DRASTIC empirical assessment methodologies in Appendix "B" of the Groundwater Protection Program.

    In the case where this preliminary analysis indicates that subsurface sewage disposal at the site has a moderate to high potential to cause groundwater quality degradation, the Town Engineer will likely require additional data in order to determine if the site is suitable for subsurface sewage disposal.

12.5. As a minimum, the additional data, if required, shall consist of test borings, with detailed boring logs, sufficient in number and location, as approved by the Town Engineer, to determine the gradient, thickness, and hydraulic conductivity of the shallowest saturated zone (aquifer) underlying the site. Based on the above information, the Developer's Engineer shall submit dilution calculations of expected nitrate pollution at the property boundary.

12.6. On the basis of this additional data, the Town Engineer may determine that the site is suitable, is suitable with specific conditions, or that the site does not appear to be suitable for subsurface sewage disposal. In the later case, additional detailed modeling of groundwater flows and pollutant dispersion may be submitted by the applicant in order to demonstrate that the site is appropriate for subsurface sewage disposal and that such an activity will not cause an unacceptable degradation in groundwater quality.

2.7 STORM DRAINAGE SYSTEMS

2.7.1 GENERAL

Storm drainage systems shall be provided to convey stormwater runoff from within the development and from the upland watershed area along natural direction of drainage.

Drainage facilities shall include the green infrastructure practices,[69] street drainage system, a system of back-lot-line drainage swales, main drainage channels through the development, and stormwater detention facilities.

Generally, preservation and improvement of natural streams, channels and swales within the development is preferable to the construction of new drainage channels, and whenever practicable, such watercourses shall be preserved.

The preservation and improvement of streams and channels downstream of the proposed development shall be required whenever such watercourses are subject to potential overflow, erosion or siltation as a result of runoff from the development.

2.7.2 DESIGN STANDARDS

Design of drainage facilities shall conform to the following standards supplemented and superseded by additional requirements as listed:

1. ASCE Manual of Engineering Practice No, 37, Design and Construction of Sanitary and Storm Sewers by American Society of Civil Engineers.

2. Urban Hydrology for Small Watersheds, Technical Release No. 55 by Soil Conservation Service, U.S. Department of Agriculture.

3. New York State Standards for Erosion and Sediment Control by New York State Department of Environmental Conservation New York.[70]

4. State Stormwater Management Design Manual by NYSDEC.

5. Irondequoit Creek Watershed Stormwater Management Report Requirements.

6. Town of Victor Local Law entitled, "Stormwater Management and Erosion & Sediment Control.

7. Materials shall be in accordance with Section 3. Construction Standards.

8. Manholes shall be spaced at intervals not greater than 300 feet.

9. Minimum size of storm sewers shall be 12-inch diameter pipe, except as otherwise permitted by these Standards.

10. Minimum velocity in storm sewers shall be 3 feet per second when flowing full.

11. Storm sewers shall be designed with uniform grade and straight alignment between manholes, outlets, and drop inlets.

12. Drop inlets shall be located at intervals not greater than 300 feet, at low points, and at street intersections.

13. Drop inlet connections between drop inlets shall be a minimum of 12” inch diameter pipe, and shall be connected from the drop inlet to the manhole with a minimum of 12” inch diameter pipe.[71]

14. Building drains shall be 4-inch diameter minimum, at a minimum slope of 1/4-inch per foot.

15. Minimum inside diameter of manholes shall be 48-inches for 12" through 18" pipe, 60-inches for 21" though 30" pipe, and 72-inches for 33" through 42" pipe.

16. All three-way manholes shall be 60-inch inside diameter or greater depending on size of storm sewers.

17. Swales and turf-lined channels shall be designed with slopes of not less than 1.0%.

18. Site grading should be no steeper than 1 vertical to 3 horizontal.

2.7.3 HYDROLOGIC DESIGN

Storm sewers and other drainage facilities for drainage areas up to 1,000 acres shall be based on a design flow with a minimum return interval of 10 years.

The design of drainage facilities for larger drainage areas and for natural watercourse channels shall be based on the drainage area according to the following:

Drainage Area	Return Interval
1000 acres to 4 sq miles	25 years
4 sq miles to 20 sq. miles	50 years
20 sq miles and above	100 years

2.7.4 GREEN INFRASTRUCTURE

The following green infrastructure practices shall be considered for use on a case-by-case basis to avoid, reduce and manage the impacts that occur during development, in an effort to meet the runoff reduction requirements noted in the New York State Stormwater Management Design Manual. All proposed green infrastructure designs must conform to the requirements listed in the current version of the NYSSMDM.[72]

Preservation of Undisturbed Areas

Preservation of Buffers

Reduction of Clearing and Grading

Locating Development in Less Sensitive Areas

Open Space Design

Soil Restoration

Driveway Reduction

Cul-de-sac Reduction

Building Footprint Reduction

Parking Reduction

Sheet flow to riparian buffers or filter strips

Vegetated open swale

Tree Planting / Tree Box

Disconnection of rooftop runoff

Stream daylighting for redevelopment projects

Rain Garden

Green Roof

Stormwater Planter

Rain Tank / Cistern

Porous Pavement

The following green infrastructure practices are not applicable for use in the Town of Victor for the purpose of meeting the runoff reduction requirements noted in the New York State Stormwater Management Design Manual:

Roadway Reduction

Sidewalk Reduction

2.7.5 STORM SEWERS AND CHANNELS

Storm sewers and channels shall be designed to convey the anticipated runoff from within the development as well as all future development from the upstream or upland watershed area.

For drainage areas of 100 acres or less, runoff within the development shall be computed by the Rational Method, using the 10-year storm. Time of concentration to first inlet shall be taken as not more than 15 minutes.

For drainage areas larger than 100 acres and for major channels or piping systems conveying stormwater through the development, the design shall be based on the Soil Conservation Service Method using the appropriate storm return interval.

2.7.6 OPEN CHANNELS

Only natural drainage channels may be continued as open channels. Street drainage systems for major subdivisions shall be designed with storm sewers.

2.7.7 DETAILS OF HYDRAULIC STRUCTURES

Complete and sufficient details of hydraulic structures shall be submitted as part of the plans. This includes, but is not limited to, cross-sections of drainage channels, erosion control facilities, special manholes, and all such other items as may be necessary to establish fully the methods and materials to be followed in construction.

2.7.8 SURCHARGING OF DRAINAGE FACILITIES

Storm drainage systems shall be designed so that surcharging will not cause backup or flooding of basements. The effect of a 25-year storm shall be studied by calculating the high water elevation, and evaluating the operation of the storm drainage and detention facilities under such flows.

2.7.9 BUILDING AND LOT STORM DRAINAGE

2.7.9.1 Finished Grade Adjacent to Buildings

Finished grade adjacent to building walls shall be a minimum one (1) foot higher than the edge of pavement for standard subdivision development. In minor developments where front setbacks exceed 150 feet and/or where natural drainage characteristics would be better utilized by draining away from the street, this requirement may be waived. In any case, provisions shall be made for positive drainage of each lot by designing a minimum grade of 2.0% away from the building to side-lot and back-lot swales, natural drainage channels, or drains.

2.7.9.2 Roof and Basement Drainage

Provisions shall be made for disposing of roof and basement drainage into the storm sewer system. Basement floors shall be at an elevation higher than the pavement to permit the street drainage system to be fully surcharged without causing backup or flooding of basements. In lieu of this, the Developer may provide that basements shall be drained with sump pumps and appropriate check valves.

In special conditions, where storm sewers are not available and topography permits, basement drainage may be conveyed to drainage swales if abutting or downstream properties will not be adversely affected. In such instances the

basement floor shall be designed above the project design flood elevation to prevent backup or flooding of the basement.

2.7.9.3 Dry Wells

Dry wells shall be used for disposing roof drainage where storm sewers are not available and soil conditions are suitable.

1. Determine if soil conditions are suitable for dry well discharge. According to the New York State Stormwater Management Design Manual (NYSSMDM), dry wells shall not be accepted in soils with a tested infiltration rate of less than 0.5 inches per hour. Soils shall also have a clay content of less than 20% and a silt/clay content of less than 40%.
2. Determine distance to seasonal high groundwater level. According to the NYSSMDM, there shall be no less than 3 feet between the bottom of the dry well and seasonal high groundwater levels.
3. Determine roof area. Calculate run-off, using Rational Method, from roof area based on minimum 10-year storm.
4. Size drywell based on run-off and soil infiltration rates, considering a complete discharge of run-off volume within a 72 hour period.
5. Dry wells shall be separated a minimum of 10 feet from structures.[73]

2.7.9.4 Restrictions

Laundry, sanitary, or kitchen wastes shall not be discharged to storm drainage systems. Drain connections from garages shall not be discharged to drainage swales, storm sewers, or drywells.[74]

2.7.9.5 Grading

Lots shall be graded to provide positive drainage. Runoff from uphill lots shall be conducted around and across downhill lots alongside-lot and back-lot swales.

Grading shall be designed to prevent runoff from adjacent lots draining against buildings and flowing across individual sewage disposal systems.

2.7.10 STORM WATER MANAGEMENT [75]

Detention or retention ponds, sedimentation basins and related control measures shall be provided where in the judgment of the Town such facilities may be required for proper drainage control. The Town reserves the right to establish specific requirements for a proposed development; however, in general, runoff is limited from any development to an amount no more than the runoff from the natural, undeveloped condition, regardless of the disturbed area size.

Stormwater management facilities shall be designed to control the runoff from the developed project site to a rate not to exceed the runoff from the natural, undeveloped site for a 2- year, 10-year, and 100-year 24 hour storm considered individually. Stormwater management practices shall be designed in accordance with the current version of the New York State Stormwater Management Design Manual. The Stormwater Management Officer will review water quality volume requirements for sites with less than one acre of disturbed area.

The Town reserves the right to establish more restrictive requirements if the proposed development site caused downstream flooding even in its natural, undeveloped condition.

The Town may require an impoundment area, and storm sewers and culverts of sufficient size and type to correct the existing downstream flooding conditions.

2.7.11 DETENTION AND RETENTION POND REQUIREMENTS

1. Ponds shall be designed to provide water quantity and quality control in accordance with the New York State Stormwater Design Manual.

2. Minimum freeboard above design high water level to the top of embankment shall be 3 feet.

3. Controlled overflow structures shall be provided for flows in excess of the maximum design flow.

4. Temporary settling basins or sediment sinks shall be provided as specified under sediment control in these Standards.

5. The outlet structure shall be designed to discharge flow as a continuous function of head at a rate not to exceed runoff from the natural, undeveloped site for all flow conditions with maximum allowable flow occurring at maximum pond depth.

6. Trickle tube outlets shall include anti-vortex devices and trash racks.

7. Controlled overflows using emergency spillways shall be designed with spillway crest not less than 2 feet below the top of the pond embankment and 1 foot above design high water level.

8. Pond embankments shall be designed with minimum side slopes of 1 vertical to 3 horizontal. Seepage control collars shall be provided on piping passing through embankments.

9. Bottom of ponds shall be designed with a minimum longitudinal slope of 0.5%.

2.7.12 STORMWATER GROUND RECHARGE

In areas where positive surface stormwater disposal is not feasible, the Town may allow stormwater ground recharge.

The Developer shall retain a geotechnical engineer to provide a detailed report and plan documenting the ability of the aquifer to receive ground recharge. The report shall include soil permeability data, geologic features, and soil sampling and exploration data. Test pits and test borings shall be provided to define the limits of the aquifer where recharge is proposed.

The ground recharge facility shall include a detention facility to provide for settling of sediment and for storage. Discharge to the recharge area shall use a trickle tube or other discharge control. Additional information including details of infiltration piping and other facilities, useful life of system, and operation and maintenance costs shall be provided by the Developer.

2.7.13 IRONDEQUOIT CREEK WATERSHED STORMWATER MANAGEMENT REPORT REQUIREMENTS

Stormwater Management Report is required for projects located within the Irondequoit Creek Watershed and which exceed either or both of the following threshold

- 15,000 square feet of additional pavement or rooftop
- 6,000 square feet of additional parking area

Stormwater mitigation may be required for all projects.

Stormwater Management Report Requirements Packet for Developers, current version, shall be followed in preparing the report. The requirements can be found at http://www.monroecounty.gov/p/eh-WMIronCrkPacket.pdf [76]

2.8 EROSION AND SEDIMENT CONTROL

2.8.1 GENERAL

To control siltation and erosion resulting from land development, the Developer shall implement erosion and sediment control measures as required by the Town.

It is the Developer's responsibility to certify that the design and construction specifications for the erosion control measures are adequate and meet all requirements.

2.8.2 EROSION CONTROL PLAN.

The Developer shall submit an erosion control plan as part of the review process. The erosion control plan shall consist of maps and other information showing the existing features, the existing and proposed contours, and applicable erosion control methods including the following:

1. Fitting the development plan to the topography and type of soils to minimize the erosion potential.

2. Exposing the smallest practical area of land at any one time during development.

3. Providing for temporary vegetation, mulching or other soil stabilization to protect critical areas during construction.

4. Returning and protecting natural vegetation wherever possible.

5. Installing permanent final vegetation and structures as soon as practicable.

6. Providing protective measures for slopes in excess of 10% and minimizing such steep grading. Terracing of steep slopes should be considered to minimize erosion potential.

7. Providing rip-rap and stone fill at points of discharge of storm sewers into open channels, ponds and swales.

8. Completing phases of construction as quickly as possible and stabilizing disturbed areas.

9. Providing a landscaping plan and planting schedule. Ground cover shall be selected to minimize future maintenance and provide plant hardiness.

2.8.3 SEDIMENT CONTROL

All siltation and sedimentation caused by erosion due to clearing, grading and removal of vegetation or other ground cover shall be retained on-site. Use interceptor swales at the base of disturbed areas, draining to temporary settling basins with sediment sinks. The storm sewer systems shall also temporarily drain to settling basins until sufficient turf has been established on graded areas to prevent erosion.

The following guidelines shall apply in the design of settling basins and sediment sinks.

1. The estimated quantity of silt caused by erosion and the silt storage volume below the settling basin flow line shall be determined using the Soil Conservation Service Methods. However, in no instance shall the sediment sink storage volume below the flow line be less than 1.0 [77] acre-inch per acre of disturbed area of the site.

2. The design of the settling basin shall prevent short circuiting. Generally, the length of the pond shall be at least twice the width, with the inlet and the outlet at opposite ends. Entrance swales and pipes shall be designed to discharge at the bottom of the pond to prevent erosion at the entrance point.

3. The settling basin shall be designed with a minimum two foot deep sediment sink below flow line, together with 1.0[78] acre-inch of storage per acre of disturbed development site. These two dimensions together with the 2:1 length to width ratio shall determine pond geometry. These are minimum values and shall be increased if required by soil type or duration of project.

2.8.4 STEEP SLOPES

The Town of Victor is characterized by areas of steep slopes. Development in steep slope areas is subject to the guidelines as follows.

2.8.4.1 Required Information

Development proposals shall be of sufficient detail to show site grading, building site locations, drainage facilities, erosion and sedimentation control measures, stream channel improvements and location of roads.

2.8.4.2 Grading of Building Sites

Padding to provide level building sites may be designed only when sufficient information is developed to clearly demonstrate that the overall design of the site will not have an adverse environmental effect or negative appearance.

2.8.4.3 Design Principles

Design in steep slope areas shall include, but not be limited to the following principles:

1. Landscaping of areas around structures to make them compatible with the natural terrain.

2. Shaping, grouping and placement of structures to complement the natural landscape.

3. Shaping of essential grading to complement existing land forms,

4. Retaining outstanding natural features such as the highest crest of the hill, natural rock outcroppings, particularly desirable trees and vegetation, and other unique features.

5. Land within the hill area in excess of 30% slope should not be developed as individual residential lots.

2.8.5 FLOOD HAZARD CONTROL

Inundation and excessive ground water seepage shall be controlled by site grading and by the establishment of adequate elevations of buildings, building openings and roadways above the project design high water levels.

Particular care shall be used in the design of developments in the vicinity of designated flood plain areas as defined by the National Flood Insurance Program or known high groundwater problem areas. The effect of such development on upstream and downstream areas and adjacent properties shall be considered, and adequate protective measures shall be included in the design.

Proposed developments within the special Flood Hazard Area as defined by the National Flood Insurance Program shall comply with the regulations required by the Flood Insurance Program.

Development within or adjacent to flood plains shall also comply with current Town requirements and NYS Department of Environmental Conservation regulations.

2.9 <u>ROADS AND STREETS</u>

2.9.1 GENERAL

Roads and streets shall be provided for convenient traffic flow and circulation, and for fire safety, emergency and maintenance access. Roads, streets and driveways shall comply with the following designations:

2.9.1.1 Primary Road

Dedicated major road used to carry greater than 3,000 Average Daily Traffic (ADT) from developed neighborhoods and municipal boundaries, and all streets serving commercial and industrial developments.

2.9.1.2 Collector Road

Dedicated main road or street used to carry up to 3,000 ADT from local streets to primary or major thoroughfares, including the principal entrance streets of major developments.

2.9.1.3 Local Street

Dedicated local street used to carry up to 1,000 ADT which connects to a Primary Road or Collector Road and which provides access to abutting properties and protection from through traffic.

2.9.1.4 Dead End Street

Dedicated local street with only one means of access, used to carry up to 250 ADT.

2.9.1.5 Driveway

A driveway, as defined in Section 211-12 of the Victor Town Code.

Four (4) or more lots must be served by a drive, road or street, consistent with these Design and Construction Standards for dedicated roads and streets.[79]

2.9.2 DESIGN STANDARDS

Major subdivisions and commercial and industrial developments require a Traffic Impact Analysis. Scope of the analysis will be determined by the Planning Board.

Design of roads, streets and driveways shall conform to the following standards supplemented and superseded by additional requirements listed in these Town Standards.

1. A Policy of Geometric Design of Highways and Streets, by American Association of State Highway and Transportation Officials (AASHTO).

2. Geometric Design Guide for Local Roads and Streets, by American Association of State Highway and Transportation Officials (AASHTO).[80]

3. Revised Draft Guidelines for Accessible Public Rights-of-Way, by the United States Access Board[81]

4. Residential Streets, Objectives, Principles and Design Considerations, published jointly by the Urban Land Institute, the American Society of Civil Engineers, and the National Association of Home Builders.

5. Materials shall be in accordance with Section 3. Construction Standards.

6. Access Management Guidelines as included in Chapter 55 of the Victor Town Code. [82]

7. Minimum right-of-way widths, pavement widths, road sections, and other details shall conform to Section 6. Standard Details.

2.9.3 HORIZONTAL DESIGN REQUIREMENTS.

Roads and streets shall be designed to conform to the following horizontal alignment requirements:

1. Minimum radius along the centerline of horizontal curves:

Primary Roads[83]	500 feet
Collector Roads or Streets	300 feet
Local Streets	150 feet

2. Minimum tangent along the centerline of road between horizontal curves shall be not less than 100 feet.

3. Stopping sight distance for each type of road shall be not less than:

Primary Roads	450 feet
Collector Roads or Streets	225 feet
Local Streets	150 feet

4. Dead end streets in developments with public water supply shall provide access to not more than 25 single family homes, and shall have a turnaround at the terminal end in accordance with Section 6. Standard Details.

Length of dead end streets in subdivisions without public water supply shall be limited to 900 feet due to restrictions for fire protection.

Exceptions to the length of dead end streets may be granted at the discretion of the Planning Board in consultation with the Town Highway Superintendent, Town Engineer, Town Traffic Engineer and the Fire Chiefs. Any exceptions shall be mitigated including the following:

- Provision along the dead end street for ease of access by emergency vehicles.
- Greater front setback for properties near the dead end access.
- Buffering along the roadway for properties near the dead end access.
- Traffic calming design to control speeds along the dead end street, such as islands and curvilinear alignment.

5. Layout of street systems in the development shall provide for access of adjacent future developments.

6. Temporary dead-end streets shall be provided with paved turnarounds conforming to the dimensions in Section 6. Standard Details.[84]

2.9.4 VERTICAL DESIGN REQUIREMENTS

Roads and streets shall be designed to conform to the following vertical alignment requirements:

1. Minimum grade 0.50%.

2. Maximum grade for:

Primary Road	6.0%
Collector Road or Street	6.0%
Local Street	8.0%
Local Street not exceeding 1,000 feet	10.0%
Driveway	10.0%

3. Vertical curves shall be provided for all changes in grade exceeding 1.0%.

4. Minimum length of vertical curves shall be determined based on the sight distance required for each type of road.

2.9.5 INTERSECTION DESIGN REQUIREMENTS

Intersections shall be designed to conform to the following requirements:

1. Within 50 feet of intersections, streets shall be approximately at right angles and in no case shall the intersecting centerlines have an angle less than 75°.

2. Minimum pavement radius at intersections shall be not less than 30 feet.

3. Intersections of Primary Roads shall be spaced not less than 1,000 feet between centerlines.

4. Intersections of Collector Streets by other streets shall be spaced not less than 800 feet between centerlines.

5. Minimum distance between centerlines of offset streets shall be not less than 200 feet.

6. Acceleration and deceleration lanes may be required by the Town along Primary Roads at principal entrance streets of developments.

7. Leveling areas shall be provided on all sides of intersections for a minimum distance of 100 feet where the grade shall not exceed 4.0%.

8. Maximum pavement grade within intersections shall not exceed 1.0% in any direction.

9. Visibility for traffic safety shall be provided within triangular areas formed by the intersecting right-of-way lines and a sight line between points 75 feet from their intersection. There shall be no plantings or structures in these triangular areas.

10. Provide intersection lighting as required by the Planning Board.[85]

2.9.6 GRADING AND ROADSIDE SWALES

11. Areas within road and street rights-of-way shall be graded to slopes not steeper than 1 vertical to 3 horizontal, except in residential subdivisions, where roadside swales/ditches shall not be allowed.[86]. Roadside swales steeper than 6.0%, or where soil conditions require, shall incorporate special design to control erosion.

2.9.7 ISLANDS [87]

Islands shall not be situated in local road medians or cul-de-sacs.

2.9.8 SIDEWALKS

Sidewalks shall be provided where required by the Town for safety or convenience. Generally, sidewalks will be required along Primary Roads and along other streets near schools, or where pedestrian traffic is anticipated. The minimum width of sidewalks shall be five (5) feet.[88]

Sidewalks shall be constructed in accordance with FHWA guidelines (Designing Sidewalks and Trails for Access), ADA Accessibility Guidelines, and NYSDOT Standard Sheet 608-01, SIDEWALK CURB RAMP DETAILS and DETECTABLE DETAILS.[89]

2.9.9 TREES WITHIN THE RIGHT-OF-WAY

Generally, the right-of-way shall be cleared of trees and brush. Only occasional existing desirable trees should be preserved within the right-of-way if approved by the Town.

2.9.10 STREET NAMES

All streets shall be named, and the names shall be subject to the approval of the Town. Names shall be sufficiently different in sound and spelling from other street names in the Town and municipalities contiguous to the Town so as not to cause confusion.

A street which is a continuation of an existing street shall bear the same name. Relating street names to features of local historical, topographical, or other natural interest is encouraged.

2.9.11 MONUMENTS

Permanent monuments shall be provided for major subdivisions at the following locations and shall be shown on the final subdivision plat:

1. All boundary corners and angle points along street rights-of-way of the parcel being subdivided.
2. In street right-of-way boundaries at all street intersections.
3. In street right-of-way boundaries at PC and PT of horizontal curves.

Monuments are required on one side of the street only, and at only one corner of intersecting streets. Adjacent monuments shall be intervisible.

Monuments shall be tied into the NYS Coordinate System where practical in the opinion of the Town Highway Superintendent or Engineer for the Town.

2.9.12 PROPERTY CORNER MARKERS

Permanent markers shall be provided for all property corners of each lot of major and minor subdivisions, and shall be in place upon completion of final grading of the lot.

2.9.13 CONSERVATION EASEMENT MARKERS AND BOUNDARY PINS

Markers and boundary pins shall be provided for all conservation easements at the following locations and shall be shown on the final subdivision plat:

2.9.13.1 At all intersections of property lines with the conservation easement boundary.

2.9.13.2 At all angle points in the conservation easement boundary.

2.9.13.3 Along the conservation easement boundary not more than 200 feet apart.

2.9.14 ROAD DEDICATION REQUIREMENTS

2.9.14.1 Policy

All primary roads, collector roads and local streets serving a development shall be built to the appropriate Town design standards and dedicated to the Town. Common driveways serving not more than three (3) properties shall be privately owned and maintained. All driveways must be built to the appropriate design standards of the Town.

2.9.14.2 Dedication Requirements

Binder course for all roads offered for dedication must set through one winter season prior to placement of top course. Road shall also be monumented before dedication will be considered. Prior to any road being accepted for dedication, it must be completed in accordance with the approved plans to the satisfaction of the Engineer for the Town.[90]

2.9.14.3 Common Driveways

This section pertains to any commonly owned means of access to not more than three (3) properties. All proposals for common driveways must be approved by the Highway Superintendent and the Planning Board and be made part of the subdivision review record. Private ownership must be clearly identified on the final subdivision map. Prior to final approval of subdivision plans, an application for a home owners association and a draft offering plan for the New York State Attorney General's Office must be filed with the Planning Board. An "exempt status" letter from the NYS Attorney General's Office may be filed in lieu of the application and offering plan. Should the commonly owned access not require a home owners association, then reciprocal easement and a maintenance agreement must be approved by the Attorney for the Town and placed in the deeds of the affected lots. A copy of the filed deed must be presented to the Building Department prior to a building permit being issued for an affected lot.

2.9.14.4 Surety

Appropriate surety shall be required for all dedicated roads and common driveways. The dedication of roads is subject to requirements in the Code of the Town of Victor, including bonding provisions and other requirements at Sections 184-14C(9)(f) and (g).[91]

2.9.15 DEDICATION OF EXISTING PRIVATE ROADS

2.9.15.1 Matter is considered a re-subdivision and must undergo Town Planning Board review.

2.9.15.2 Matter will normally be considered a minor subdivision unless complexities require otherwise in which case, process for major subdivision applies.

2.9.15.3 All responsible officials will review the proposal and their respective approvals are required before the Planning Board will consider the final plat.

2.9.15.4 As with all other Planning Board matters, project sponsors will pay all costs (legal and engineering) associated with review of the project before dedication is accepted. If the effort is unsuccessful, then the sponsors will still be responsible for municipal review costs.

2.9.15.5 After appropriate approvals are granted, a letter of approval and any and all conditions will be forwarded to the Town Board for action. A resolution accepting dedication must be approved by the Town Board.

2.9.15.6 The Planning and Building Department will coordinate all road dedication requests for existing private roads/drives.[92]

2.9.15.7 SEQR - These requests for dedication are considered a Type II Action under SEQR, Pt. 617.13 and do not require any environmental review.

2.9.16 DRIVEWAY DESIGN REQUIREMENTS

Design and location of driveways shall be in accordance with applicable Town Standards and requirements of NYSDOT Policy and Standards for Entrances to State Highways. These standards shall apply also to driveways entering on County and Town roads and streets.

2.9.16.1 Vertical Alignment

Maximum grade shall not exceed 10%.

Driveways shall slope away from the edge of road pavement at the same slope as the road shoulder, and the slope shall extend at least the full width of the shoulder so as not to create a bump or depression in the shoulder area.

2.9.16.2 Horizontal Alignment

Minimum radius along the centerline of driveways shall be 50 feet.[93]

Minimum radius along the inside edge of driveway shall be 35 feet unless shown otherwise in Section 6. Standard Details.

Driveways shall conform to the horizontal alignment requirements of Driveway Details in Section 6. Standard Details. Driveway pavement shall extend at least 10 feet back from the edge of the travel lane.

2.9.16.3 Application Requirements

Written application including a plan and a profile of the driveway may be required by the Highway Superintendent for approval.

2.9.16.4 Fire Department Requirements

Driveway design shall be required to meet the current NY State Codes in force at the time.[94]

2.9.17 STREET AND TRAFFIC SIGNS

2.9.17.1 Street Signs

Street signs shall be provided at all street intersections, shall be of the type approved by the Town Highway Superintendent, and shall conform to the requirements of National Manual of Uniform Traffic Control Devices with NYS Supplement. All street signs, including their size, MUTCD designation, and sign face shall be shown in their proposed location on the preliminary and final plans.[95]

2.9.17.2 Traffic Signs

Traffic signs shall be provided at intersections designated by the Town Highway Superintendent and shall conform to the requirements of National Manual of Uniform Traffic Control Devices with NYS Supplement. All traffic signs, including their size, MUTCD designation, and sign face shall be shown in their proposed location on the preliminary and final plans.[96]

2.9.18 STREET LIGHTING

All major commercial and industrial subdivisions with dedicated roads shall create a lighting district. However, in major residential subdivisions, individual homeowner lamp posts shall be installed in lieu of a Rochester Gas & Electric Corporation lighting district. Lamp posts will be required prior to issuance of a Certificate of Occupancy. The lamps shall have photo electric devices and be maintained by the property owner. Lamp posts shall have uniform location of 20 feet from right-of-way and use uniform light fixtures.

In instances where a lighting district is created, street lighting fixtures are to be installed, owned and maintained by Rochester Gas & Electric Corporation. Street lighting fixtures shall be what is known by Rochester Gas & Electric as "Colonial". Light fixtures are spaced approximately 150 feet apart.

Provide intersection lighting as required by the Planning Board.[97]

A street lighting plan showing the location of street lighting fixtures shall be submitted as part of all Final Subdivision Plans.

2.10 FIRE SERVICE PROVISIONS [98,99]

2.10.1 Key Boxes

Fire Department Access Key boxes shall be required for all new commercial or tenant spaces. Where appropriate, a single key box may be shared by several tenants within a single structure. Key boxes shall be located above the FDC or next to the front tenant door.

2.10.2 Sprinkler Systems

Fire suppression sprinkler systems protecting more than one commercial tenant space shall be electronically monitored by an agent of the building's owner.

2.10.3 Vehicle Access Points

Vehicle access points must have minimum clearances of 13'-6" height, 20' width and a turning radius of 50'. Turning radii must be separated by at least 30', measured from the beginning of the point of curvature to the next point of curvature.

2.10.4 Hydrants and Fire Department Connections

Hydrants serving fire department connections (FDC) must be situated within 100 feet of the FDC but outside the collapse zone(s) of the building (distance equal to 1.5 times the measure of the peak of the structure to final grade).[100]

Additional hydrants are to be provided when the distance of apparatus path of travel exceeds 500' from nearest street hydrant and/or additional apparatus, including pumpers and aerial devices, would be blocked from accessing building by supply hose of first arriving apparatus.

Private fire hydrants shall have independent supply lines, not shared with sprinkler supply lines.[101]

FDCs to be 5" Storz connections with 30-degree downturn elbow.

2.10.5.1 Combustible Mulch[102]

Combustible mulch shall be separated from buildings by a two-foot noncombustible barrier of decorative stone or pavement.

Combustible mulch shall not be used along main walkways or within 10-feet of exit doors where people may congregate to smoke.

SECTION 3.0 CONSTRUCTION STANDARDS

SECTION 3.0 CONSTRUCTION STANDARDS

3.1 GENERAL

3.1.1 PRELIMINARY MATTERS

Site preparation, grading and construction of facilities shall not be started until the Final Subdivision Plan has been approved by the Planning Board and all necessary signatures have been affixed on the drawings, and until the Letter of Credit has been received by the Town. Items to be completed prior to construction commencing[103] are listed on the Checklist Prior to Construction Commencing for Land Development Projects included in Section 3.1.12 on page 3-4.

3.1.2 PRE-CONSTRUCTION MEETING

A pre-construction meeting shall be held prior to the start of construction to review Town requirements and to establish the project schedule. The Developer, his Engineer and Contractor shall attend this meeting to discuss the project with Town representatives.

3.1.3 INSPECTION

All construction shall be subject to inspection by representatives of the Town. The Developer and his Contractor shall give not less than 24 hours notice for inspection and shall provide adequate access for such inspection at all stages of the work. This shall include erosion and sediment control inspections required as part of the Town's MS4 Permit requirements. MS4 inspections are required per Town Code Section 177-7 (A)(2). A Stormwater Violation Notice Process is in place to enforce Stormwater Management and Erosion and Sediment Control regulations within the MS4.[104]

All costs related to engineering and inspection by representatives of the Town shall be paid by the Developer. An amount estimated by the Town for engineering and inspection shall be provided to the Town in accordance with Section 1.4 Surety.[105]

All field changes shall be approved by the Town.[106]

3.1.4 RESPONSIBILITY FOR CONSTRUCTION

The Developer is solely responsible for construction of all dedicated facilities in accordance with the approved plans, and all applicable regulations and Town standards.

Inspection during construction shall not imply acceptance of the work by the Town. If subsequent inspections, operation or occurrences reveal defects in the work, such defects shall be corrected by the Developer to the satisfaction of the Town.

The development shall not be accepted for dedication until all construction of dedicated facilities is fully completed by the Developer and found to be satisfactory by the Town.

3.1.5 PROTECTION OF EXISTING UTILITIES AND STRUCTURES

It is the Developer's and his Contractor's responsibility to locate and protect all existing utilities and structures before, during, and after excavation. Protect all utilities, services, and systems, including public and private poles, conduits, wells, water piping, storm drainage piping and culverts, existing sewage disposal systems, and farm tiles, including related structures, in a manner acceptable to the representative of the Town and the owner of each utility, service or system.

Any damage done to any utility, service or system shall be repaired at the Contractor's expense in a manner acceptable to the representative of the Town and the owner of the system. Where construction is near or underneath any pole, conduit, pipe or similar structure, provides any necessary support.

Notify all utilities and the Underground Facilities Protective Organization, Inc. (Telephone 1-800-962-7962) 48 hours prior to any excavation.

Where excavations are within existing pavement and sidewalk areas, pavements and sidewalks shall be sawed or cut uniformly along the limits of excavation. All disturbed pavements, sidewalks, curbs and gutters shall be replaced by the Contractor to match the existing or remaining surfaces.

3.1.6 PERMITS AND TRAFFIC CONTROL

The Developer and his Contractor shall obtain and comply with all necessary permits from the authority having jurisdiction for construction within and adjacent to public roads.

Provide flagmen, signs, barricades, lights, and flashing signals for traffic control, safety and protection of the public as required by the authority having jurisdiction.

3.1.7 SHOP DRAWINGS AND MANUFACTURER'S INFORMATION

The Contractor shall submit shop drawings for all materials to be incorporated in the dedicated facilities to the Developer's Engineer for review. Upon confirming that the shop drawings conform to the approved plans, specifications and Town standards, the Developer's Engineer shall forward four (4) signed copies of such shop drawings to the Engineer for the Town for review. The Town Engineer will return two (2) reviewed copies to the Developer's Engineer for forwarding to the Contractor. A digital-based or equivalent alternative process may be proposed to the Town Engineer.[107]

3.1.8 NOISE CONTROL

Construction equipment and vehicles shall be maintained by the Contractor in good working condition to control noise and exhaust emissions.

Construction activity shall be restricted to Monday through Friday from 7:00 a.m. to 7:00 p.m. and Saturdays from 7:00 a.m. to 6:00 p.m. No construction activity is allowed on Sundays and holidays. Special permission shall be obtained from the Town for activities that require continuous operation beyond the restricted hours. This restriction applies also to starting up and moving of construction equipment.

3.1.9 WEATHER CONDITIONS

Work shall be suspended during unsuitable weather conditions. The Contractor shall take necessary precautions to protect all Work, materials and equipment from damage or deterioration due to floods, rain, wind, and snow storms.

The mixing and placing of concrete, construction of pavements, gutters and sidewalks, laying of masonry and installation of sewers shall be stopped during rain storms or other unsuitable weather. Newly placed concrete and masonry shall be protected by suitable covering.

3.1.10 CONNECTION TO, AND OPERATION OF, EXISTING FACILITIES

Connection to and operation of existing Town facilities is not permitted for any purpose, unless specifically authorized by a designated representative of the Town. It is strictly prohibited to operate existing hydrants, valves or other controls. Discharging sewage, groundwater or surface drainage to existing sanitary or storm sewer systems is also prohibited. Any person violating this restriction will be prosecuted to the full extent of the law.

Generally, connection to existing systems will not be permitted until all work on the new facility to be dedicated is completed, tested and found to be acceptable by the Town.

3.1.11 RECORD DRAWINGS

Record drawings shall be prepared by the Developer's Engineer for all dedicated facilities and public & private underground utilities. Record drawings submitted for review shall be submitted in electronic format in accordance with Section 1.3.3. Review set shall include one (1) set of electronic files and one (1) set of paper prints. If the Town Engineer recommends revisions to the submitted plan, the Developer's Engineer shall revise the record mapping and resubmit one (1) set of electronic files and one (1) set of paper prints for further review. Continue the re-submittal process until record mapping approval is obtained from the Town Engineer.[108],[109] Comply with any Monroe County Water Authority requirements for record drawings of water system improvements.

Following approval by the Town Engineer, record drawings for minor subdivisions shall include one (1) set of electronic files and four (4) paper prints and shall be submitted as final to the Town. Record drawings for major subdivisions and commercial development projects shall include two (2) sets of electronic files and four (4) paper prints and shall be submitted as final to the Town.[110]

3.1.12 CHECKLIST PRIOR TO CONSTRUCTION COMMENCING FOR LAND DEVELOPMENT PROJECTS

		DATE
1.	Planning Board Approval of Final Plans	_____
2.	Drawings signed by Planning Board Chairman & Town Engineer	_____
3.	Stormwater Pollution Prevention Plan signed by Developer & Contractor	_____
4.	NYS Department of Health Water System Plan Approval	_____
5.	NYS Department of Health Realty Subdivision Approval	_____
6.	NYS Department of Environmental Conservation Sanitary Sewer Plan Approval	_____
7.	NYS Department of Environmental Conservation Notice of Intent for SPDES General Permit for Stormwater Discharges from Construction Activity	_____
8.	NYS Department of Environmental Conservation Freshwater Wetlands Permit	_____
9.	NYS Department of Environmental Conservation Water Supply Permit Application Approval	_____
10.	NYS Department of Transportation Highway Work Permit	_____
11.	Ontario County Highway Work Permit	_____
12.	Water Benefitted Area or District Application[111]	_____
13.	Sewer District Formation or Extension Application[112]	_____
14.	Town of Farmington Approval of Sanitary Sewers	_____
15.	Monroe County Water Authority[113]	_____
16.	Stormwater Control Facility Maintenance Agreement	_____
17.	Utility Easement Drawing and Description	_____
18.	Right-of-way Description and Drawing	_____
19.	Surety Posted with Town and Accepted by Town Board	_____
20.	Amount of Letter of Credit	_____
21.	Pre-Construction Meeting Held	_____
22.	All Legal and Engineering Review Fees Paid	_____

3.2 SITE PREPARATION

3.2.1 GENERAL

Site preparation consists of clearing and grubbing, topsoil removal and stockpiling, protection of existing facilities, providing temporary access, erosion and siltation control, and related work.

3.2.2 CLEARING AND GRUBBING

Clear and grub all areas of excavations, trenches, embankments, and areas to be graded by removing all trees, stumps, roots, brush and debris within the limits indicated on the drawings. All trees, shrubs and vegetation that are not to be removed shall be protected and preserved.

Arrange for disposal of clearing and grubbing materials satisfactory to the New York State Department of Environmental Conservation and the Town. Burning of debris in the work areas is not permitted.

All work shall be in accordance with applicable requirements of NYSDOT 201 - Clearing and Grubbing.

3.2.3 LAYOUT OF WORK

The Developer is responsible for layout of all work on the project. All work shall be staked-out by experienced surveying personnel in accordance with the approved plans. Stake-out shall be in sufficient detail to provide correct horizontal locations and elevations of structures, pipes, roads and grading.

Stake-out shall be performed as the work progresses. Any stake-out that is disturbed shall be re-staked before continuing with the work.

3.2.4 TOPSOIL REMOVAL AND STOCKPILING

Remove and stockpile topsoil from areas to be excavated and graded. Topsoil shall not be removed from the project site, but shall be retained until it is used in landscaping of project sites. Erosion control shall be provided and maintained for all topsoil stockpiles.

3.2.5 EROSION AND SILTATION CONTROL

Construction of erosion and siltation control for projects disturbing more than one (1) acre shall be in accordance with the NYSDEC SPDES General Permit for Stormwater Discharges from Construction Activity.

Construct temporary erosion and siltation control facilities before starting excavation and grading. Before starting construction of these facilities, submit to Engineer for the Town for review written description and details of the proposed erosion and siltation control facilities.

Prevent direct discharge from dewatering pumps and surface runoff from the construction sites to storm sewers, culverts, streams or ditches. Intercept and conduct surface runoff and discharge from dewatering pumps to siltation ponds before discharging to natural drainage channels.

Maintain temporary erosion and siltation control facilities during the construction period until final grading, landscaping and permanent erosion control are completed. At that time,

remove the temporary facilities, after obtaining authorization from the Engineer for the Town, and complete the site work as specified.

3.2.6 TEMPORARY ACCESS

Provide and maintain temporary parking areas and access roads to project sites for use by all Contractors on this project, and for delivery of materials.

Maintain the temporary roads and parking areas in serviceable condition until the permanent roads are completed.

3.3 GRADING, EXCAVATION AND RELATED WORK

3.3.1 GRADING

Site grading shall be completed to within one (1) foot of finished grades and contours shown on the grading plan before starting any trench excavation, and shall include grading of lots, drainage channels, detention ponds, temporary siltation ponds, and roadways.

Graded areas shall be relatively smooth and free of ruts, depressions or mounds, and shall be graded for proper drainage.

3.3.2 TRENCH EXCAVATION

Excavation shall include the removal of all materials encountered, including rock, necessary for the installation of piping, appurtenances and structures. Excavation shall also include separation and disposal of material that is not suitable for backfill and storing material that is suitable for backfill.

Trenches shall be excavated only so far in advance of pipe laying as necessary for installation of pipe and to comply with access requirements.

If encountered, rock may be loosened by blasting or other methods after review by the Engineer. The Contractor must take proper precautions to protect persons and property. Blasting operations shall be carried out only by experienced personnel. The Contractor shall obtain any permits and insurance necessary for blasting operations. Any damages resulting from rock excavation shall be the responsibility of the Contractor.

Rock, boulders and large stones shall be removed to provide a minimum clearance of 6 inches below and on each side of all pipes and a minimum clearance of 1 1/2 feet around manhole risers.

3.3.3 TRENCH WIDTH LIMITS

The following trench width limits must be maintained at all times until backfill is complete even if it may be necessary to leave sheeting and bracing in place:

	MAXIMUM TRENCH WIDTH	
	At Top of Pipe	At Ground Surface
Building Sewers	2’-6”	5’-0”
Sanitary Sewers	3’-0”	7’-0”
Storm Sewers	3’-0”	7’-0”

See special requirements for excavation limits at manholes.

3.3.4 SEPARATION OF BACKFILL MATERIAL

Excavated material which is suitable for backfill shall be separated from earth excavation which is unsuitable for backfill and rock, boulders, frozen earth, paving materials, concrete, and stones larger than 8 inches in their greatest dimension. These materials which are not to be used for backfill shall be hauled away and disposed of at a site to be arranged for by the Contractor and subject to the approval of the New York State Department of Environmental Conservation.

3.3.5 DEWATERING

Trenches shall be dewatered so that pipe is not installed in water. The Contractor shall provide pumping equipment and other methods for dewatering trenches. The discharge from dewatering equipment shall be conducted to sedimentation basins and silt traps before discharging to natural drainage channels, gutters, drains, or storm sewers. Surface water shall be diverted or otherwise prevented from entering excavations and to prevent damage to adjacent property.

Water shall not be allowed to soften the bottom of the trench. If the trench bottom becomes soft due to failure to keep the excavation dry, the softened material shall be removed and replaced with crushed stone.

3.3.6 MAINTENANCE OF BANKS

Provide sheeting, bracing, and shoring of trenches as necessary to protect adjacent structures including poles, trees, pavements, pipelines, and to provide safe working conditions.

The use of a trench shield will be permitted if adequate provisions are made for preventing movement of the pipe and caving of the banks while the shield is being moved. The use of a bar by a workman is not considered adequate.

The methods to maintain the stability of banks must be in accordance with applicable laws, rules and regulations, and are the sole responsibility of the Contractor.

3.3.7 PIPE BEDDING

When crushed stone cradle pipe bedding for storm sewer pipe is not required, the bottom of the pipe trench shall be formed in solid, undisturbed earth except as otherwise specified. Water shall not be allowed to soften the bottom of the trench. The pipe bed shall be prepared accurately with hand tools so that the full length of the pipe is supported by the pipe bed. The bottom of the trench shall be checked before the pipe is lowered into the trench to make certain that the pipe to be laid will not exceed the allowable deflection. Recesses shall be excavated for pipe bells, so that the pipe does not rest on the bells. If the trench is excavated below the required depth, the excess depth shall be filled with crushed stone cradle. [114]

Trenches shall be excavated to a level 6 inches below the bottom of the pipe in rock areas or where the trench bottom contains stones larger than 2" in diameter. The foundation for the pipe in such areas shall be provided by the use of crushed stone cradle.

Trenches for sanitary sewers and buildings sewers shall be excavated to a level 6 inches below the bottom of the pipe. The foundation for the pipe shall be provided by the use of crushed stone cradle. The crushed stone cradle shall be spread and shaped by hand to provide uniform support for the pipe for at least 3/4 of the pipe diameter and shall extend for the full width of the trench.

Where the 6 inch depth of crushed stone cradle is not adequate to provide a proper foundation for the pipe in the opinion of the Engineer, additional depth of crushed stone cradle shall be used.

If any trench is excavated below the required depth or depth as authorized by the Engineer, the excess depth shall be filled with crushed stone cradle.

Coupling or bell holes shall be prepared so that the pipe does not rest on the outer portion of the coupling or bell. Holes shall be of adequate size but must not be excessively large.

3.3.8 CRADLE MATERIALS

Cradle materials for pipes, manholes and building sewers shall be as follows:

3.3.8.1 Crushed Stone Cradle

NYSDOT 703-02, Size No. 2, mixed with sufficient smaller sized stone and screenings to provide a dense material that gives the maximum support to the pipe. Use only enough smaller stones and screenings to fill the voids in the No. 2 stone. Crusher run material that meets this specification is acceptable.

3.3.8.2 Concrete Cradle

NYSDOT Section 501, Portland Cement Concrete, Class B with 2-inch[115] maximum slump.[116] When approved by the Engineer, water may be omitted from the mix.

3.3.9 SPECIAL REQUIREMENTS AT STRUCTURES

Excavation around manholes and other structures shall provide a clearance of 1% feet. The excavation in the areas where pipes enter the structure shall be kept to a minimum.

Where any pipe passes through a structure excavation, crushed stone cradle shall be provided under the pipe for support. The crushed stone cradle with 2:1 side slopes shall extend from the pipe to the bottom of the excavation and shall support the pipe for a width equal to at least 3/4 of the pipe diameter.

Provide uniform support with crushed stone cradle under manhole bases as detailed.

Special attention shall be given to keeping the excavation opened and dewatered so that work around the outside of structures can be completed properly.[117]

3.3.10 SPECIAL REQUIREMENTS FOR BUILDING SEWERS

Where building sewers pass through main sewer trench excavations, the foundation for the pipe and tee shall be provided by the use of crushed stone cradle. The crushed stone cradle shall extend the full width of the trench. The crushed stone cradle shall be shaped by hand to provide uniform support for the pipe and tee for a width equal to at least 3/4 of the pipe diameter. [118]

3.3.11 SPECIAL REQUIREMENTS FOR APPURTENANT ACTIVITIES

Appurtenant Activities may only be conducted in accordance with the following conditions adopted as Local Law No. 12-95 by the Town Board:

1. Appurtenant activities are to be of a temporary nature for the removal and/or screening of excess topsoil. Such activities may only be conducted on parcels of land that have received a subdivision and/or site plan approval which includes an appurtenant activity plan.

2. As part of a subdivision and/or site plan approval request for any parcel on which appurtenant activities are to be conducted, the applicant shall submit a plan, which may be incorporated into other plans submitted by the applicant, including:

   (a) Total cubic yards to be processed.
   (b) Total cubic yards to be removed.
   (c) A description of the proposed truck route to be utilized for hauling.
   (d) A statement that the appurtenant activities will conform with the Town of Victor Planning Board approved final subdivision plan, site plan, landscaping plan, grading plan or any other approved plan.
   (e) A map prepared by a licensed engineer or surveyor at a scale of 1" = 200' or larger showing boundaries of the land from which the topsoil will be removed, and location of the stockpile(s) of topsoil to be processed.
   (f) Drainage Plan.
   (g) A dust control plan.
   (h) Topsoil restoration plan.
   (i) Such other information as the Town Planning Board in its discretion shall require.
   (j) NYSDEC SPDES General Permit for Stormwater Discharges from Construction Activity if disturbing more than one (1) acre.

   If appurtenant activities are to be conducted on any parcel where the subdivision and/or site plan approval does not include such an appurtenant activities plan, the applicant shall separately apply for a site plan approval to cover such plan and may not conduct any appurtenant activities until such site plan approval is received.

3. Permission to conduct appurtenant activity shall expire on the same date that any subdivision approval expires, in accordance with §184-11 (B)(3)(d)[119] of the Town of Victor Subdivision Regulations and §276(11) of the New York Town Law.

4. All appurtenant activities commenced henceforth shall be in conformity with the provisions of this local law, the New York State Mined Land Reclamation Law, Town of Victor subdivision regulations, and the Zoning Ordinance of the Town of Victor.

5. Nothing contained in this subsection shall require any person engaged in agricultural operations to obtain approval for the purpose of removing topsoil, soil or earth from one location on his or her land to another location on the same land for grading, improving or draining said land, provided that such removal is necessary for or accessory to the agricultural operations.

6. Approved subdivisions shall provide certification that 75% of the items included in the letter of credit are complete before appurtenant activities, that will result in the removal of topsoil from the site, can begin. Appurtenant activities to screen topsoil to be used on-site may be commenced prior to that time.

7. Topsoil may not be stockpiled closer than 100 feet to a public right-of-way or any adjoining property line not part of the subdivision.

8. Hours of operation. Appurtenant activities shall be conducted only between 7:00 a.m. and 6:00 p.m. local time and shall not be allowed on Sundays or public holidays, as defined in the General Construction Law. Loaded trucks shall leave the premises only within the hours permitted for the operation of appurtenant activities.

9. Noise. Noise from appurtenant activities and related operations shall not interfere unduly with the quiet enjoyment of neighboring properties.

10. Roads shall be kept free of stones and dirt on a daily basis.

11. Any letter of credit, bond or other form of surety posted by an applicant as part of a subdivision or site plan approval shall include the value of the appurtenant activity work, in an amount of at least $3,000 per acre for each acre of land within the area to be used for the appurtenant activity. The letter of credit, bond or other form of surety shall guarantee that with one (1) year after termination of either the approval or the operation, whether voluntarily by the operator or by order of the Town Board, whichever may come first, the land shall be restored in conformity with both the standards set forth in these regulations and the appurtenant activities plan, and shall comply with any State or Department of Environmental Conservation regulations.

12. Stop-work orders. The Town Code Enforcement Officer or other official designated by the Town Board shall have the right and authority to issue stop-work orders to those operating in violation of the terms of these regulations or contrary to the applicant's maps or plans upon which its approval was based.

3.3.12 STABILIZATION OF STEEP SLOPES[120]

Stabilization of grades 1 vertical to 3 horizontal (or steeper) shall include additional measures beyond seeding. Practice to consider include biological rolled erosion control blankets (or mats), which may use jute, excelsior, straw, wood fibers, coconut fibers, or a combination of these items, or others to the satisfaction of the Town Engineer (if new products become available). Non-biodegradable options may be acceptable as well, including plastic netting or mesh, synthetic fibers with netting, or bonded synthetic fibers, or a combination of biodegradable and non-biodegradable products or others to the satisfaction of the Town Engineer. Area to be properly prepared and seeded prior to blanket installation. Blanket to be anchored in accordance with manufacturer's recommendations. Contractor to be responsible for maintenance of slope stabilization until vegetation is established.

3.4 BACKFILL AND EMBANKMENTS

3.4.1 GENERAL

Backfill and embankments consist of placing and compacting backfill material in trenches and around structures, and construction of embankments and fills, including maintenance of backfilled surfaces, disposal of excess excavated material, and related work, and shall generally conform to applicable requirements of NYSDOT 203.

Embankments and fills shall be completed before installation of piping and appurtenances is started.

3.4.2 MATERIALS

In general, construct fills and backfill trenches with excavated material provided that the excavated material is suitable in the opinion of the Engineer. Where there is a deficiency of excavated material due to the rejection of a part thereof, use excess excavated material from other portions of the project.

Granular fill shall be used for backfill, where directed by the Engineer or where there is a deficiency of suitable or select excavated material on the project.

3.4.2.1 Suitable Excavated Material

Dry excavated material from which all frozen material, pavement materials, cinders, ashes, refuse, sod, roots, organic material, rock or stones larger than 8 inches in the greatest dimension have been removed.

3.4.2.2 Select Excavated Material

Select, dry excavated material from which all pavement materials, concrete, cinders, ashes, refuse, organic material, topsoil, sod, roots, frozen material, boulders, rock, or stones larger than 2 inches in the greatest dimension, or other material, which in the opinion of the Engineer is not suitable, have been removed.

3.4.2.3 Granular Fill

NYSDOT 203-2.02C, Select Granular Fill except that all particles shall pass a 2-inch square sieve.

3.4.2.4 Controlled Density Fill

K-Krete Controlled Density Fill (CDF) Mix consisting of Portland Cement and salvaged materials as developed by K-Krete Inc.

3.4.3 EMBANKMENTS AND FILLS

Construct fills and embankments using select excavated material within 2 feet of finished grade, and suitable excavated material below depths of 2 feet within finished grade. Place and compact fill material in layers not to exceed 12 inches or as specified under compaction requirements.

Rework embankment and fill that does not conform to these specifications to meet the requirements, or remove and replace the material with acceptable fill. Compact all fill

material placed before the end of each work day. Grade the final layer placed each day for proper drainage to prevent ponding of surface run-off on the fill.

3.4.4 TRENCH BACKFILL

3.4.4.1 General

Trenches shall be backfilled immediately after installing the pipe and completion of work within the excavation. Backfill around each pipe shall be placed before installing the next length of pipe. Trenches shall be relatively dry during backfilling.

3.4.4.2 Pipe Sidefill and Safety Cover

From the top of the pipe bed or cradle to a level one foot over the top of the pipe, backfill shall be select excavated material deposited by hand in 6 inch layers and compacted by tamping. Backfill shall be deposited in the trench for its full width on each side of the pipe simultaneously so as not to disturb the pipe.

3.4.4.3 Backfill around Structures and Appurtenances

Backfill around manholes, inlets, valve boxes and hydrants shall be select excavated material deposited in accordance with the requirements for backfill around pipe to a level one foot over the top of the entering pipes. Above this level, backfill shall be deposited uniformly around the structure or appurtenance in 12-inch layers and thoroughly compacted.

3.4.4.4 Backfill above Safety Cover

Above the levels specified for pipe sidefill and safety cover, the trench shall be backfilled and compacted by mechanical methods. For each section of trench, the Engineer shall review the method of backfill and compaction considering the type of backfill material and the finished ground surface above the pipe.

3.4.4.5 Backfill under Pavement Areas

Backfill under roadways and surfaces normally subject to vehicular traffic, including pavements and gutters, shall be granular fill uniformly placed, leveled, and compacted in 12 inch layers using mechanical compactors. Select excavated material may be used only if it meets the specifications for granular fill.

3.4.4.6 Detectable Warning Tape [121]

Acid & alkali-resistant, polyethylene film warning tape manufactured for marking and identifying underground utilities, a minimum of 6 inches wide and 4 mils thick, continuously inscribed with a description of the utility in bold readable lettering, with metallic core encased in a protective jacket for corrosion protection, detectable by metal detector when tape is buried less than 30-inches deep from finished grade; colored as follows: (Detectable warning tape shall be a minimum of 12-inches wide for utilities where Drawings indicate tape shall be buried greater than 30-inches from finished grade.) [122]

1. Green: Sewer systems, including storm and sanitary sewer mains & laterals.

3.4.5 COMPACTION

Compaction methods employed shall produce the specified compaction, prevent subsequent settlement, and provide the required support for proposed construction on the compacted subgrade. Proposed compaction methods shall avoid damage to existing facilities and to completed construction.

Prior to starting placement and compaction of backfill and embankment, submit in writing to the Engineer for the Town a description of the methods and equipment proposed for compaction. The Engineer will review this information considering the type of backfill material and the finished ground surface. If the proposed method does not provide the compaction required, alternate methods shall be adopted until the required compaction is achieved.

Determine the moisture content of backfill or fill material, and adjust it to provide optimum moisture content for the required compaction.

The minimum compaction requirements are expressed in percent of the maximum dry weight density of the material as determined by ASTM D698. Minimum compaction requirements for backfill and embankment shall generally conform to the following, unless otherwise specified:

3.4.5.1 Embankments

	Maximum Layer Before Compaction	Minimum Compaction
Under roadways, shoulders, gutters and sidewalks	12 inches	95%
All other areas	24 inches	85%

3.4.5.2 Trench Backfill

Under pipe and pipe cradle	6 inches	95%
Pipe sidefill and safety cover to 1 foot over top of pipe	8 inches	93%
Under roadways, shoulders, sidewalks, parking areas, and gutters	12 inches	95%
All other areas	24 inches	85%

3.4.5.3 Structure Backfill

Around all structures and appurtenances including manholes, inlets, hydrants and valve boxes	12 inches	95%

3.4.6 DENSITY TESTS

Density tests of compacted material are required to confirm the actual compaction. Such tests shall not exceed a test for every 200 CY of embankment, and every 100 feet of trench backfill. The Developer or his Contractor shall arrange with a testing laboratory to perform density tests at the locations directed, and furnish a written report of each test to the Town. Density tests shall be made in accordance with AASHTO Standard T-238.

3.4.7 SITE MAINTENANCE AND CLEANUP

The Developer shall maintain the site in a neat and safe condition. Surplus materials, debris, rock and unsuitable excavated material shall be removed and disposed of as the work progresses.

Dust shall be controlled so as not to affect adjacent developed areas, roads and streets.

Gravel run-off areas shall be provided for construction traffic leaving the site to control tracking and deposits of dirt from the site on adjacent roads and streets. The Developer and his Contractor are responsible for removing tracked or dropped material as often as required to keep roads and paved areas clean.

3.5 WATER DISTRIBUTION SYSTEM

All water main and water service materials, installation, testing, and disinfection shall be in accordance with the Uniform Design and Construction Standards for Extending Water Distribution Systems, by Monroe County Water Authority.[123]

All new hydrants shall include a reflective hydrant marker. The marker shall be 3/8”-diameter fiberglass rod, with red and white reflective banding, a heavy-duty stainless steel spring, and be top-mounted. Markers shall be in place prior to the final surety release.[124]

Private hydrants shall be equipped with a hydrant marker that shall be attached to a bonnet bolt. Marker shall be 60-inches in height, colored red with silver reflective striping. Maintenance of markers on private fire hydrants shall be the responsibility of the Fire Department.[125]

3.6 SANITARY SEWER SYSTEM

3.6.1 MATERIALS

3.6.1.1 Polyvinyl Chloride (PVC) Main Sewer

ASTM D3034 SDR 35, PVC Plastic Gravity Sewer Pipe with elastomeric gasket joints. Provide 4 inch diameter branch fittings. Use SDR-21 PVC pipe for sewers deeper than 16 feet.

3.6.1.2 Polyvinyl Chloride (PVC) Building Sewer

ASTM D3034-SDR-21, PVC Plastic Gravity Sewer Pipe and fittings with elastomeric gasket joints.[126] Glued joints will not be allowed.[127]

3.6.1.3 Force Main Pipe

a. Ductile Iron Pipe (DIP)

AWWA C151/ANSI A21.51, thickness Class 51 with ANSI A21.4 cement mortar lining and seal coating inside, bituminous coating outside, AWWA C111/ANSI 21.1 1 push-on joints.

b. Polyvinyl Chloride (PVC) Pipe

ASTM D2241 SDR 21, PVC Pressure Rated Pipe and fittings, 200 psi pressure rating, with elastomeric gasket joints, adapters, High Density Polyethylene Pipe.

c. High Density Polyethylene (HDPE) Pipe

DR 17, PPI designation PE 3408, and conform to AWWA C906. All joints shall be fuse welded mechanical joints with compression couplings and stainless steel inserts. No glued joints allowed underground[128]

3.6.1.4 Detectable Warning Tape

Detectable tape shall be green and read "CAUTION - BURIED SEWER LINES BELOW". Tape shall be placed over the centerline of all sanitary mains. Must have a minimum 5.0 mil overall thickness. Must conform to ASTM 2103, ASTM D882 and ASTM 2578.[129]

3.6.1.5 Force Main Fitting

AWWA C110/ANSI A21.10 ductile iron fittings or AWWA C153/ANSI A21.53 ductile iron compact fittings with ANSI A21.4 cement mortar lining and seal coating inside, bituminous coating outside.

3.6.1.6 Crushed Stone Cradle

NYSDOT 703-02, Size No. 1 & 2, or size No. 1 & 1A. Crusher run material meeting these specifications will be acceptable.[130]

3.6.1.7 Concrete

Concrete for backing, bracing, encasement and cradle shall be NYSDOT Section 501,[131] Portland Cement Concrete, Class B, 2-inch maximum slump. Water may be omitted from the mix for cradle and encasement when approved by the Engineer.

3.6.1.8 Cleanouts

Fabricated from ASTM D3034 SDR 35, PVC Plastic Gravity Sewer Pipe and fittings, and brass screw plugs as shown in the Standard Details. Glued joints will not be allowed.[132]

3.6.1.9 Manholes

a. Bases, Risers, and Cone Tops

Precast reinforced concrete manhole units conforming to NYSDOT 706-04 requirements for circular manhole units and ASTM C-478 and designed to sustain AASHTO H20-44 wheel loading.[133] Refer to Standard Details for dimensions, minimum base slab reinforcing steel and other features.

b. Cover Slabs

Precast reinforced concrete cover slabs. NYSDOT 555-2, Structural Concrete, Class A conforming to NYSDOT 501-1, 501-2, and 501-3 and ASTM A-615, grade 60 deformed reinforcing steel, and other features.

c. Base, Riser, and Cover Slab Joints

Tongue and groove with super “O” joints and gaskets conforming to ASTM C-443.[134]

d. Pipe to Manhole Connections

Flexible rubber boot gasket, power sleeve, and a stainless steel take-up clamp, PSX Positive Seal as manufactured by Press Seal Gasket Corporation, or equal.

All flexible manhole seals shall be sized for inlet and outlet pipes to provide a watertight seal and shall be installed in preformed manhole openings by the manhole supplier.

e. Manhole Steps

Steps shall be non-corrodible, aluminum magnesium alloy, with intermediate supports at 5-foot intervals, forged aluminum with drop front design and grooved tread surface, or nylon/co-polymer polypropylene with steel reinforcement manhole steps.

The portion of the step embedded in concrete shall be coated with a six mil coat of Bitumastic No. 505 as manufactured by Koppers Company or a 15 mil coat of DeGraco Moisture/Gard 9330 thick black as manufactured by the Detroit Graphite Company, or equal. The first step should be no more than 30 inches below the rim.[135,136]

f. Manhole Frames and Covers

Cast iron frames and covers, uniform quality, free from blow holes, porosity, hard spots, shrinkage defects, cracks, fins, burrs, sand and slag. Cleaned by sand blasting. Asphalt coated. Materials shall conform to ASTM A-48, Class 30. Bearing surfaces shall be ground or machined. Designed to carry a wheel load of 16,000 pounds plus impact. Total weight of frame and cover shall be not less than 100 pounds. Covers shall be cast with the words "SANITARY SEWER" as part of the design.

Campression® water tight manhole frame and cover assembly as manufactured by EJ (East Jordan) or equal. The inside diameter for clearance shall be minimum of 24 inches.[137]

g. Concrete for Benches[138]

NYSDOT 555-2, Structural Concrete, Class A conforming to NYSDOT 501-1 and 501-3.

h. Dampproofing

Two 3.6 wet mil coats of bitumastic black coal tar sealer / damp-proofing applied by the manufacturer on interior and exterior surfaces, except the base slab. RC30 as manufactured by Midland Asphalt, MasterSeal 615 as manufactured by BASF or equal. [139]

i. Non-Shrink Grout

Fast setting, non-shrink, non-metallic, high strength, water resistant, premixed grout. Octocrete as manufactured by Penncrete Products Company, or equal.

j. Grade Rings

ASTM C-478 precast reinforced concrete rings, 3 inches thick, 8 inches wide and 24 inches inside diameter.

k. Brick

ASTM C-32 sewer and manhole clay or shale brick.

l. Mortar

ASTM C-270, Type M. Mix design by volume shall be one part Portland Cement, one part masonry cement, and five parts mortar sand. Lime shall not be used.

m. Concrete Curing Compound.

ASTM C-309 Liquid membrane-forming compound for curing concrete.

n. Drop Pipe and Fittings.

ASTM D3034 SDR 35 PVC Plastic Gravity Sewer pipe and fittings with elastomeric gasket joints.

o. Manhole Cover Inserts.

High density polyethylene bowl, ASTM D1248, Class A, Category 5, minimum thickness 1/16 inch. Black, closed cell neoprene gasket, ASTM-D-1056-73T, cemented to the underside of the insert bowl rim by the manufacturer.

One gas pressure relief and one vacuum relief valve installed in the insert bowl. Valve bodies manufactured of high density polyethylene with neoprene valve plugs confined with stainless steel springs. The pressure and vacuum relief valves shall release at a differential pressure of 1 psi.

Sewer Guard as manufactured by Preco Industries, Ltd., or equal.

p. Pipes for Inverts [140]

ASTM D3034 SDR 35 PVC.

3.6.1.10 Pumping Stations

Pumping stations shall include above ground fiberglass reinforced enclosures housing self-priming, horizontal, centrifugal, v-belt motor driven sewage pumps, valves, internal piping, emergency by-pass piping connections, motor and level controls, internal wiring, emergency power, and remote monitoring.[141]

The pumping station equipment and accessories shall be provided as a complete system package, factory assembled and tested by the pump manufacturer. Self-priming Super T or Ultra V Series pumping station for automatic operation, as manufactured by Gorman Rupp Company. [142]

Pumps 15HP and greater shall be provided with soft starts. Where required by the Engineer or the Town, variable frequency drives shall be provided.

Emergency power generation shall consist of a Gorman Rupp Company “Auto Start” pump.

Remote monitoring shall consist of FSI Systems, Inc. Phoenix Sentry Internet Enabled Monitoring System, with battery back-up and padlock adapter.[143]

Provide two (2) sets of Operation and Maintenance Instructions with submittal of shop drawings.

3.6.2 INSTALLATION OF MAIN SEWERS, BUILDING SEWERS AND FORCE MAINS

3.6.2.1 Handling Materials

The Contractor shall inspect pipe for damage before unloading. The pipe shall be unloaded in accordance with the manufacturer's instructions and with care to avoid damage. Pipe shall not be dropped or bumped against pipe already on the ground or any other object on the ground. Prevent damage to the pipe ends. Keep interior and ends of pipe free from dirt.

The pipe shall be lowered into the trench to prevent impact and damage. As the pipe is lowered, the ends and interior of the pipe shall be inspected for cleanliness and shall be cleaned, if necessary. Do not allow the pipe to be dragged along the ground or trench bottom.

3.6.2.2 Making Joints

Joints shall be made in accordance with the manufacturer's instructions and direction of the Engineer. Glued joints will not be allowed.[144] The interior of the pipe and coupling already in place shall be cleaned, the gasket inserted in the groove, lubricant applied, and the length of pipe to be installed pushed home. A gauge shall then be used to verify that the rubber ring is located in the groove all the way around.

The pipe joint shall not be made under water.

3.6.2.3 Other Installation Requirements

Pipe installation shall commence at the lowest elevation and shall terminate only at manholes. Pipe bells or couplings shall be laid on the upstream end.

Each section of pipe shall rest on the prepared pipe bed or cradle for the full length of the barrel. The pipe shall be laid true to established line and grade to within 1/4 inch. Any pipe that is disturbed after laying shall be taken up and relaid.

If a trench shield is used, the pipe joint shall not be covered until after the shield has been advanced in the trench and the joint has been inspected for movement.

The upstream end of the pipe shall be plugged at all times when pipe laying is not in progress. Water and dirt shall be prevented from entering the pipe.

The interior of all HDPE gravity sewer pipes shall be de-beaded.[145]

3.6.2.4 Special Requirements for Main Sewers

Tee branches for building sewers shall be installed at the locations shown on the drawings or as directed by the Engineer. The tee branches shall be installed with the main sewer pipe.

3.6.2.5 Special Requirements for Building Sewers

Building sewers shall be 4 inch diameter unless otherwise shown and shall be laid at a grade of 1/4 inch per foot. A riser shall be installed if necessary, so that the building sewer can be laid at a grade of 1/4 inch per foot to meet the required end elevation.

Concrete cradle, bend, end cap, and marker shall be installed for each building sewer before backfilling the main sewer pipe. If risers are to be used, they shall also be installed with these fittings.

Building sewer extensions to the street right-of-way shall be made as required after the main sewer has been completed or may be installed immediately after installation of the main sewer.

Whenever the end of a building sewer is to be backfilled, whether temporarily or permanently, a removable plug or end cap shall be installed. The plug or end cap shall be braced with removable blocking to prevent movement during testing. A hardwood or pressure treated 2" x 4" marker extending three feet above finished grade shall be placed at the end of all laterals.[146]

3.6.2.6 Special Requirements for Force Mains

Force main installation shall commence at the pumping station with pipe bells or couplings laid on the upstream end. The force main shall slope up from the pumping station to the discharge manhole without sags, dips or air pockets.

Force main fittings shall be provided with concrete backing against undisturbed earth to prevent movement during testing and operation. Soft, unstable soil may require the use of tie rods and clamps.

Provide a minimum area of 2.0 square feet of blocking against undisturbed earth for each force main fitting.

3.6.2.7 Repairs

If it is necessary to repair or relay a section of pipe due to broken pipe, faulty line or grade, or any other reason, repair clamps shall not be used, but the pipe to be repaired shall be removed and replaced with new pipe.

3.6.3 INSTALLATION OF MANHOLES AND PUMPING STATIONS

3.6.3.1 Handling and Setting Manholes

Precast manhole sections shall not be shipped or handled until concrete is completely cured. Any damage that occurs during shipping or handling shall be cause for rejection. Precast sections shall be inspected before unloading and any sections that have been damaged or do not meet the specifications shall not be unloaded.

Set the manholes on concrete cradle as detailed. All pipe openings shall be preformed as detailed.

3.6.3.2 Openings and Joints

Openings around pipes and lift holes shall be completely filled with nonshrink grout and after initial set waterproofed on the outside with two coats of dampproofing. Riser, top, and grade ring joints shall be made using nonshrink grout in a sufficient quantity to cover the joint approximately 1/4 inch thick for a strip 4 inches wide all around the outside of the manhole and waterproofed by covering with two coats of dampproofing. All joints and openings shall be closed upon setting the manhole.

3.6.3.3 Benches and Inverts [147]

Benches shall be constructed of NYSDOT class A concrete and sloped to drain. Change in size and grade shall be made gradually and evenly. Changes in direction of the sewer and entering branches shall have a radius 1/2 the inside diameter of the manhole. Apply 2 coats of SIKAGARD 62 epoxy resin coating to bench walls. Sprinkle silica sand on top of freshly coated bench walls. In highly corrosive conditions/areas, Town Engineer may require epoxy coatings to be applied to manhole walls and top slab.

Inverts shall be formed of half pipe PVC or VTP. For PVC pipe, anchor in place with 1/2 inch diameter x 2.5 inch long stainless steel carriage bolts. Locate the round head of the bolt on the inside of the pipe with a SS washer and nut, snugged tight on the outside. Bolt hole should be at least two inches below the top of the pipe. Anchors should be installed 12 inches on-center each side of the invert pipe. Brick formed inverts may be used when approved by the Town Engineer. Refer to the Precast Concrete Sanitary Manhole detail; brick shall be installed above the half pipe section to set the elevation of the manhole bench wall to the top of the pipe elevation across the manhole.[148]

3.6.3.4 Grade Rings and Covers.

Grade rings shall be used to bring the manhole cover and frame to an elevation 1/4 inch below finished grade in paved areas and to meet finished grade in other areas. Total height of grade rings shall not exceed 8 inches.

3.6.3.5 Manhole Cover Inserts

Furnish and install watertight manhole cover inserts where shown on the drawings or designated by the Engineer.

After completion of all other work on the manhole, clean manhole frame bearing surface of all dirt and debris. Place insert with the rim gasket in full contact on the frame bearing surface. Replace the manhole cover being careful to prevent damage to the pressure and vacuum relief valves.

Test the seal with water after installation of the manhole cover insert. If infiltration is more than 1 gallon per 24 hours, remove the manhole cover, reseat the insert rim gasket, and retest the seal.

3.6.3.6 Installation of Pumping Stations

Install pumping station structure, enclosure, and mechanical and electrical equipment as shown on the drawings. Installation of pumps, level control system, electrical equipment, and related components shall be in accordance with the manufacturer's instructions.

The electric service for the pumping station shall be as shown on the drawings. Arrangements for the final connection shall be made by the Contractor.

Remote monitoring systems shall be as shown on the plans. Arrangements for activation shall be made by the Contractor.[149]

Install an underground electric service at a minimum depth of 24 inches, from the connection on the power company power pole to the meter box. Use galvanized heavy wall rigid conduit from the conduit on the electrical control panel to the power pole.

All electrical work shall conform to National Electrical Code and shall meet all requirements of the New York Board of Fire Underwriters. Upon completion of the work, the Contractor shall furnish a certificate of inspection and approval by the New York Board of Fire Underwriters. Inspections and final approval of the work shall be obtained and paid for by the Contractor.

Provide lightning arresters on the electric service located adjacent to the meter in accordance with National Electrical Code requirements.

Provide the proper electrical equipment including any transformers necessary for the electric service provided, to operate pumps, controls and accessories at their respective voltage and ampere ratings.

All metal conduits, cabinets and other enclosures and neutral conductor of systems shall be permanently grounded to grounding rods or underground piping. Make all ground connections as required by the National Electrical Code. All circuits and feeders shall be tested and proven free of improper grounds.

3.6.4 PREPARATION OF SEWER SYSTEM FOR USE

3.6.4.1 General

Provide all labor and equipment for cleaning and testing including hoses, pumps, plugs, temporary connections, gauges, meters and measuring devices to perform the specified tests. Testing shall be done under observation of the Engineer for the Town.

3.6.4.2 Water Supply for Testing and Flushing

The Contractor shall make arrangements for furnishing and disposing of water for testing.

3.6.4.3 Cleaning and Flushing

Each section of sanitary sewer and all wet wells [150] shall be flushed to remove all silt, sand, gravel, and other debris prior to testing. Hydraulic propelled devices, rodding equipment or machines for direct removal shall be used if any sections of pipe cannot be flushed clean.

Flushing shall be started at the highest end and proceed to the lowest end of the system. All debris shall be removed at each consecutive manhole and shall not be flushed into downstream sections.

3.6.4.4 Testing Requirements

All sewers, manholes, and wet wells shall be tested for exfiltration and infiltration. Exfiltration testing of sewers shall be done by the use of compressed air. Manholes and wet wells shall be tested for exfiltration by water testing or by vacuum testing.[151]

Force mains shall be tested by hydrostatic pressure test.

Any section of sewer and force main, and any manhole that does not meet the specified test results must be repaired and retested until a satisfactory test is completed.

Tracer wire or detectable metal tape shall be tested for continuity.[152]

3.6.4.5 Air Testing Main Sewers and Building Sewers

Building sewers shall be tested with the main sewer and the following procedure shall be used:

a. The test shall be conducted between two (2) consecutive manholes.

b. The test section of the sewer line shall be plugged at each end. One of the plugs used at the manhole must be tapped and equipped with air inlet connection for filling the line from the air compressor.

c. Ends of building sewers, cleanouts, stubs and fittings into the sewer test section shall be properly capped or plugged, and carefully braced against the internal pressure to prevent air leakage.

d. An air hose shall be connected to tapped plug from the portable air control equipment which shall include valves and pressure gauges to control the air entry rate, and to monitor the air pressure in the pipeline.

e. A second air hose shall be connected between the air compressor and the air control equipment.

f. Supply air to the test section slowly, filling the pipeline until a constant pressure of 4.0 psig is maintained.

g. When constant pressure of 4.0 psig is obtained, regulate the air supply so that the pressure is maintained between 3.5 psig and 4.0 psig for at least 2 minutes. Depending on air/ground temperature conditions, the internal air temperature will stabilize in equilibrium with the temperature of the pipe walls. The pressure will normally drop slightly until equilibrium is obtained; however, a minimum of 3.5 psig is required.

h. Determine the time required for the pressure to drop from 3.5 psi to 3.0 psi, and compare this interval to the minimum time for the pipe diameter and length per the table below. If the rate of air loss is greater than or equal to the minimum time for the pipe diameter and length, the installation is acceptable.

i. Upon completion of the test, open the bleeder valve and allow all air to escape. Caps and plugs shall not be removed until all air pressure in the test section has been reduced to atmosphere pressure.

Table – Minimum Time Required for Air Testing

Pipe Diameter (inches)	Time (minutes)
4	2.57
6	3.85
8	5.13
10	6.42
12	7.70

Minimum Time Formula (minutes) = (77/120) *Pipe Diameter (in)[153]

3.6.4.6 Water Testing Manholes and Wet Wells

Exfiltration tests shall be conducted on all manholes and wet wells by filling the manhole or wet well with water to the top of the cast iron frame and allowing to stand for at least two hours. More than one inch drop in water level shall be cause for rejection.[154]

Exfiltration test may only be used when ground water elevation is less than 2 feet below the highest point of sewer pipe.[155]

3.6.4.7 Vacuum Testing of Manholes

a. Vacuum testing for concrete sewer manholes shall conform to the test procedure described in ASTM C1244.

b. When the sanitary sewer is tested and approved by the Architect/Engineer and prior to backfilling, the manholes or wet wells shall be tested. The inlet and outlet pipes for the manholes or wet wells shall be plugged with a plug that allows no leakage.

c. The test head shall be placed at the inside of the top cone section or inside 24 inch opening and the seal inflated in accordance with the manufacturer's recommendations.

Diameter of Structure (inches)	Time (seconds)
48	60
60	75
72	90
120	150

d. A vacuum of 10 inches of mercury shall be drawn and the vacuum pump shut off. With the valves closed, the time shall be measured for the vacuum to drop to 9 inches. The manhole or wet well shall pass the test if the time is greater than the following:

If the manhole or wet well fails the initial test, necessary repairs shall be made. Retesting shall proceed until satisfactory results are obtained.

All structures, manholes, and drop inlets shall be visually inspected for tight joints and neat workmanship. The flow lines in a structure shall be smooth and neat.[156]

3.6.4.8 Liquid Testing

A satisfactory liquid test will be required for all sections of sanitary sewers before final acceptance of the system. The following procedure shall be used.

a. The testing device shall be positioned within the line in such a manner as to straddle the pipe joint or lateral connection to be test

b. The testing device ends (end elements, sleeves) shall be expanded so as to isolate the joint or lateral connection from the remainder of the line and create a VOID area between the testing device and the pipe joint or lateral connection. The ends of the testing device shall be expanded against the pipe with sufficient pressure to contain a minimum of 10 psi within the VOID without leakage past the expanded ends.

c. Water or an equivalent liquid shall then be introduced into the VOID area until a pressure equal to or greater than the required test pressure is observed with the VOID pressure monitoring equipment. If the required test pressure cannot be developed (due to joint leakage), the joint will have failed the test and shall be repaired by approved means.

d. The flow rate of the test liquid shall then be regulated to a rate at which the VOID pressure is observed to be the required test pressure. Reading of the test liquid flow meter shall then be taken. If the flow rate exceeds 1/4 gallon per minute (due to joint leakage), the joint will have failed the test and shall be repaired and retested.[157]

3.6.4.9 Deflection Testing

Deflection tests shall be performed on all flexible pipe main sewers. The test shall be conducted after the final backfill has been in place at least 30 days. No pipe shall exceed a deflection of 5%. If the deflection test is to use a rigid ball or mandrel, it shall have a diameter equal to 95% of the inside diameter of the pipe. The test shall be performed without mechanical pulling devices.

All new sewers mains shall be video televised with a camera specifically designed for sewer construction. The operating technician will utilize a title panels to document on the digital video to record pertinent data observed and pipe footage. The starting manhole, direction of televising and terminating manhole shall be displayed at the beginning of the record. The video shall be MPEG format and provided on a portable hard drive.[158]

3.6.4.10 Testing Force Mains

a. Ductile Iron Force Mains

The pressure test shall be done in accordance with the requirements of AWWA C-600 for ductile iron pipe.

The volume of water required to maintain the specified pressure shall not exceed the limits determined by the following formula per AWWA C-600:

$$L = (SDP^{.5})/133{,}200$$

Where L is the allowable leakage in gallons per hour; S is the length of pipe to be tested in feet; D is the nominal diameter of the pipe in inches; and P is the average test pressure during the leakage test in pounds per square inch gauge. Unless otherwise noted, the test pressure during the leakage test shall be read in pounds per square inch gauge.

b. PVC Force Mains

The pressure test shall be done in accordance with the requirements of AWWA C-605 for PVC pipe.

The volume of water required to maintain the specified pressure shall not exceed the limits determined by the following formula per AWWA Manual of Practice M23:

$$L = (ND\ P^{.5})/7{,}400$$

Where L is the allowable leakage in gallons per hour; N is the number of joints in pipeline tested; D is the nominal diameter of the pipe in inches; and P is the average test pressure during the leakage test in pounds per square inch gauge. Unless otherwise noted, the test pressure during the leakage test shall be read in pounds per square inch gauge.

c. HDPE Force Mains

The pressure test of HDPE force mains shall be conducted in accordance with Performance Pipe Technical Note 802, Alternate 2. The test pressure shall be 150% of the system design pressure.

The pipeline will be subject to an “Initial Expansion Phase” of four (4) hours. The pipeline will gradually be pressurized to 150% of the system design pressure, adding make-up water as necessary to maintain the pressure.

Immediately following the “Initial Expansion Phase”, monitor the amount of make-up water required to maintain test pressure for a minimum period of two (2) hours. If the amount of make-up water needed to maintain test pressure does not exceed the amount in the following Table, no leakage is indicated and the test is acceptable.

Water Allowance for Test Phase - Alternative 2
(U.S Gal.100 feet of pipe)[159]

Pipe Diameter (inches)	2 Hour Test	3 Hour Test
4	0.25	0.40
6	0.60	0.90
8	1.00	1.50
10	1.30	2.10
12	2.30	3.40

3.6.4.11 Inspection after Testing

After testing, the Engineer will make a complete visual inspection of the system. The Contractor shall remove and replace manhole covers and furnish lights to assist the Engineer in making this inspection. All defects shall be promptly repaired by the Contractor.

3.6.4.12 Testing Pumping Stations

The pumping station piping, equipment and control systems shall be tested for proper operation under normal operating conditions for all anticipated conditions, including emergency power. Testing shall include the station’s remote monitoring system. In the presence of the Engineer for the Town, and Superintendent of the Farmington Water and Sewer District, the manufacturer's representative shall inspect the installation and operation of the equipment and controls, and make adjustments as necessary for proper operation of all equipment and systems.[160]

Upon completion of testing, provide manufacturer's certification that the equipment has been installed and operates in accordance with the manufacturer's specifications.

3.7 STORM DRAINAGE SYSTEM

3.7.1 MATERIALS FOR STORM DRAINAGE SYSTEM

3.7.1.1 Storm Sewers and Culverts (RCP)

NYSDOT 706-02 Reinforced Concrete Pipe (RCP), Class IV, Wall B minimum, bell and spigot type elastomeric gasketed joints, with fully bituminous coated CMP or SDR 35 PVC laterals and couplings. Provide for culverts NYSDOT 706-07 Reinforced Concrete Pipe End Sections.

3.7.1.2 Storm Sewers and Culverts (CMP)

NYSDOT 707-02, Corrugated Steel Pipe (CMP), helically corrugated, 14 gauge minimum thickness, galvanized, fully bituminous coated, including bituminous coated corrugated steel connecting bands, branch tees and laterals. Provide for culverts NYSDOT 707-10 Galvanized Steel End Sections.

3.7.1.3 Storm Sewers and Culverts (CPEP)

NYSDOT 706-14, Corrugated Polyethylene Storm Drain Pipe, smooth interior, conforming to AASHTO M-252 and M-294, including split couplings corrugated to engage a minimum of four pipe corrugations and neoprene gaskets, branch tees and laterals. Provide for culverts NYSDOT 707-10 Galvanized Steel End Sections.

3.7.1.4 Polyvinyl Chloride (PVC) Building Sewer[161]

ASTM D3034-SDR 35, PVC Plastic Gravity Sewer Pipe and fittings with elastomeric gasket joints. Glued joints will not be allowed

3.7.1.5 Perforated Piping Between Catch Basins, Underneath Town Road.

12-inch diameter and larger, NYSDOT 706-12 Smooth Interior Corrugated Polyethylene Pipe

3.7.1.6 Concrete

NYSDOT Section 501, Portland Cement Concrete, Class A.[162]

3.7.1.7 Reinforcing Steel

ASTM A-6 15, Grade 60 deformed reinforcing steel.

3.7.1.8 Nonshrink Grout

ASTM Nonshrink, high strength, non-metallic, water resistant, pre-mixed grout. Octocrete as manufactured by Penncrete Products Company, or equal.

3.7.1.9 Concrete Curing Compound

ASTM C-309 liquid membrane-forming compound for curing concrete.

3.7.1.10 Concrete Cradle

NYSDOT Section 501, Portland Cement Concrete, Class B, 2-inch maximum slump.[163]

3.7.1.11 Manholes

a. Bases, Risers, and Cone Tops

Precast reinforced concrete manhole units conforming to NYSDOT 706-04 requirements for circular manhole units and ASTM C-478. Refer to Standard Details for dimensions, minimum base slab reinforcing steel and other features.

b. Cover Slabs

Precast reinforced concrete cover slabs. NYSDOT 555-2, Structural Concrete, Class A conforming to NYSDOT 501-1, 501-2 and 501-3, and ASTM A-615, Grade 60 deformed reinforcing steel. Refer to Standard Details for cover slab dimensions, reinforcing steel and other features.

c. Base, Riser, and Cover Slab Joints

Tongue and groove joints set in fast setting, nonshrink, high strength, water resistant, nonmetallic, premixed grout.

Continuous solid rubber ring gasketed joints conforming with ASTM C-443 will be considered by the Engineer in lieu of the nonshrink grout joints.

d. Manhole Steps

Aluminum Alloy 606 1 -T6, forged from a solid extruded section Part No. 12653A as manufactured by Aluminum Company of America or Relgrit Part No. LR-800 as manufactured by Reliance Steel Products Company, or equal.

The portion of the step embedded in concrete shall be painted with a six mil coat of Bitumastic No. 505 as manufactured by Koppers Company or a 15 mil coat of DeGraco Moisture/Gard 9330 thick black as manufactured by the Detroit Graphite Company, or equal.

e. Dampproofing

Two 3.6 wet mil coats of bitumastic black coal tar sealer / damp-proofing applied by the manufacturer on interior and exterior surfaces, except the base slab. RC-30 as manufactured by Midland Asphalt, Hydrocide 700B as manufactured by BASF or equal.[164]

f. Manhole Frames and Covers.

Castings shall be uniform quality and shall be free from blow holes, porosity, hard spots, shrinkage defects, cracks, fins, burrs, sand and slag. Castings shall be

cleaned by sand blasting and shall be asphalt coated by the manufacturer. Materials shall conform to ASTM A-48, Class 30.

Castings shall be true to pattern with satisfactory fit of component parts. Bearing surfaces shall be ground or machined. Castings shall be designed to carry a wheel load of 16,000 pounds plus impact.

Total weight of frame and cover shall be not less than 300 pounds.

Standard manhole frame and cover, Catalog No. R-1726, Type B, indented top design as manufactured by Neenah Foundry Company, or Catalog No. 1042 indented top design as manufactured by Syracuse Castings Sales Corporation, or equal.

g. Grade Rings

ASTM C-478 precast reinforced concrete rings, 2 inches thick, 8 inches wide, and 24 inches I.D.

h. Brick

ASTM C-32 sewer and manhole clay or shale brick.

3.7.1.12 Inlets

a. Concrete Catch Basins

Precast, reinforced concrete catch basins conforming to NYSDOT 706-04, designed for AASHTO HS-20 loading. Refer to Standard Details for dimensions and other requirements.

b. Concrete Brick and Block

ASTM C-139 solid load bearing units.

c. Mortar

ASTM C-270, Type M. Mix design by volume shall be one part Portland Cement, one part masonry cement, and five parts mortar sand. Lime shall not be used.

d. Inlet Frame and Grate

NYSDOT 655-2.02, Frames and Grates. Rectangular steel welded grates and frames, galvanized, supplied with locking devices

e. Damp-proofing

Two 3.6 wet mil coats of bitumastic black coal tar sealer / damp-proofing applied by the manufacturer on interior and exterior surfaces, except the base slab. RC-30 as manufacturered by Midland Asphalt, Hydrocide 700B as manufactured by BASF or equal.[165]

3.7.1.13 Dry Wells [166]

1. According to the NYSSMDM, dry wells may be constructed by lining an excavation with filter fabric and filling with bank run gravel.
2. As an alternative, precast products are recommended, for ease of maintenance and for larger capacity (with the same volume of space), such as Kistner Concrete Products, Inc. or Lakelands Concrete Products, Inc. “Leaching Chamber” or similar.
3. Where practical, use roof gutter guards and/or sumps or traps (with clean-outs) in the conduit(s), to minimize the potential pollution entering the dry well.

3.7.2 INSTALLATION OF STORM SEWERS

3.7.2.1 Alignment and Grade

Pipe installation shall commence at the lowest point with pipe bells laid on the upstream end. Pipe shall be installed at the elevation and grades shown on the drawings and with straight alignment between manholes and inlets.

3.7.2.2 Preparation of Pipe Bed

When crushed stone cradle pipe bedding for pipe is not required, the[167] pipe bed shall be prepared using hand tools to shape the bottom of the trench to match the barrel of the pipe with recesses for the joints. The pipe bed shall provide as nearly as possible a uniform and continuous bearing for the full length of the pipe between joints. Tolerances up to ¼ inch ± variance in the pipe bed will be permitted.

Except where excavation for rock or unsuitable foundation material is required, care shall be taken not to excavate below the depth necessary to lay the pipe. If excavation does exceed the necessary depth, the trench shall be backfilled under the pipe with crushed stone, thoroughly tamped.

Where rock is encountered, it shall be removed to a depth six inches below the bottom of the pipe. Support the pipe on crushed stone cradle.

Where wet or unsuitable foundation material is encountered, it shall be removed. Support the pipe on crushed stone cradle.

3.7.2.3 Handling Pipe

The Contractor shall inspect pipe for damages before unloading. The pipe shall be unloaded with care to avoid damage. Pipe shall not be dropped or bumped against pipe already on the ground or any other object. Keep the pipe ends and interior clean.

3.7.2.4 Making Joints

Joints shall be made in accordance with the manufacturer's instructions and as directed by the Engineer. Joints shall not be made under water.

3.7.2.5 Installation of Pipe

Each length of pipe shall rest on the prepared pipe bed or cradle for the full length of the barrel. The pipe shall be laid true to established line and grade to within ¼ inch. Any pipe that is disturbed after laying shall be taken up and relaid.

If a trench shield is used, the pipe joint shall not be covered until after the shield has been advanced in the trench and the joint has been inspected for movement.

3.7.2.6 Repairs

If it is necessary to repair or relay a section of pipe due to broken pipe, faulty line or grade, or any other reason, repair clamps shall not be used, but the pipe to be repaired shall be removed and replaced with new pipe.

3.7.3 INSTALLATION OF MANHOLES

3.7.3.1 Handling and Setting Manholes

Precast manhole sections shall not be shipped or handled until concrete is completely cured. Any damage that occurs during shipping or handling shall be cause for rejection. Precast sections shall be inspected before unloading and any sections that have been damaged or do not meet the specifications shall not be unloaded.

Set the manholes on crushed stone[168] cradle as detailed. All pipe openings shall be preformed as detailed.

3.7.3.2 Openings and Joints

Openings around pipes and lift holes shall be completely filled with nonshrink grout and after initial set waterproofed on the outside with two coats of dampproofing. Riser, top, and grade ring joints shall be made using nonshrink grout in a sufficient quantity to fill the joint completely and to cover the joint approximately ¼ inch thick for a strip 4 inches wide all around the outside of the manhole and waterproofed by covering with two coats of dampproofing. All joints and openings shall be closed immediately upon setting the manhole.

3.7.3.3 Benches and Inverts

Benches and inverts shall be formed of concrete and accurately shaped to a semicircular section conforming to the inside of the adjacent sewer pipe. Change in size and grade shall be made gradually and evenly. Changes in direction of the sewer and entering branches shall have a radius ½ the inside diameter of the manhole.

3.7.3.4 Grade Rings and Covers

Grade rings shall be used to bring the manhole cover and frame to an elevation 1/4 inch below finished grade in paved areas and to meet finished grade in other areas. Total height of grade rings shall not exceed 8 inches.

3.7.4 INSTALLATION OF INLETS

Set precast inlets on concrete cradle as detailed. Construct inlets in accordance with NYSDOT 604-3, and as shown in the Standard Details.

Openings around pipes shall be completely filled with non-shrink grout. Inverts and benches shall be formed of concrete and shaped to drain.

Frames and grates shall be set in full mortar beds.

Prior to construction the concrete apron at any gutter inlet, the Developer shall contact the Planning and Building Department regarding use of the Town's "MS4 inlet concrete stamp". The Town will require a refundable deposit for the duration of the stamp's loan period.[169]

3.7.5 INSTALLATION OF DRY WELLS [170]

1. Protect infiltration area from compaction prior to installation.

2. Excavate dry well area and line with non-woven filter fabric (such as Mirafi 180-N or Carthage FX-80S). A sand layer may be used at on the bottom of the dry well in lieu of filter fabric. Sand shall be washed and meet AASHTO Std. M-43, Size No. 9 or No. 10.

3. Place washed bank run gravel (meeting size requirements for AASHTO Std. M-43; Size No. 2 or No. 3) in the lined area, to within 12" of the ground surface. See NYSSMDM C.2, "Construction Specifications for Infiltration Practices" for additional material and installation requirements. ALTERNATIVELY, excavate for precast structure. Install stone bedding layer at bottom of excavation, and place precast structure. Fill sides with additional stone envelope (12" width from dry well perimeter, for full depth of dry well). In both instances, top the dry well excavation with topsoil.

4. If possible, install dry well(s) during later phases of site construction to prevent sedimentation and/or damage from construction activity.

3.7.6 PREPARATION FOR USE

3.7.6.1 Cleaning

All pipes and appurtenances shall be cleaned by flushing or mechanical methods to remove all foreign material. Water shall be furnished and disposed of by the Contractor.[171]

3.7.6.2 Inspection

After cleaning, the Engineer will make a complete visual inspection of the system. The Contractor shall remove and replace manhole covers and furnish lights to assist the Engineer in making this inspection.

3.8 ROADWAYS AND STREETS

3.8.1 MATERIALS

3.8.1.1 Granular Fills

NYSDOT 203-2.02C, Select Granular Fill except that the material shall have the following gradation:

U.S. Standard Sieve	Percent Passing By Weight
2"	100
No. 40	0 – 70
No. 200	0 – 15

3.8.1.2 Foundation Course[172]

NYSDOT 304-2, Subbase Course, Type 2, gravel or crushed stone, with the following gradation limits:

U.S. Standard Sieve	Percent Passing By Weight
2"	100
1/4”	25 – 60
No. 40	5 – 40
No. 200	0 – 10

3.8.1.3 Crushed Stone for Underdrain

NYSDOT 703-0201, Crushed Stone, consisting of equal parts of Size 1 and 2 washed crushed stone.

3.8.1.4 Filter Fabric for Underdrain and Perforated Pipe[173]

High porosity nonwoven geotextile fabric composed of polypropylene filaments, Mirafi 140N as manufactured by Mirafi, Inc.

3.8.1.5 Underdrain Pipe

NYSDOT 706-13, Corrugated Polyethylene Storm Drain pipe (CPEP), perforated, conforming to AASHTO M252, including corrugated split couplings. Provide minimum one foot cover, as measured from the bottom of the subbase, over underdrain pipe.[174]

3.8.1.6 Geotextile Fabric

Nonwoven or woven geotextile fabric for stabilization of soft subgrade, conforming to AASHTO/AGC Task Force 25 Specifications and the following minimum requirements:

Fabric Property	ASTM	Property Value
Tensile Strength	D-4632	180 lbs
Puncture	D-4833	75 lbs
Trapezoidal Tear	D-4533	75 lbs
UV Resistance	D-4355	70 %

3.8.1.7 Crushed Stone

NYSDOT 703-0201, Crushed Stone, Size 1A for surface treatment, or size selected by Engineer.

3.8.1.8 Bituminous Material

NYSDOT 702-3 101, Asphalt Emulsion, Grade RS-2, or grade and type of material selected by Engineer and Contractor.

3.8.1.9 Asphalt Concrete

NYSDOT 400, Bituminous Plant Mix, Type 3 (19.0 mm) Binder Course and Type 6F (12.5 mm) or 7F (9.5 mm)[175] Top Course.[176]

3.8.1.10 Concrete

NYSDOT Section 501, Portland Cement Concrete.[177] Class and compressive strength as specified.

3.8.1.11 Sidewalks

NYSDOT 608-2, Conventionally Formed Concrete Sidewalks, Class D, except that wire fabric reinforcing shall be omitted, refer to Concrete Sidewalk detail. Machine formed concrete sidewalks shall use Class J concrete. All sidewalk concrete shall include macro fibers applied at 5 pounds per cubic yard. [178,179,180]

3.8.1.12 Concrete Gutters

NYSDOT 624-2.02, Conventionally Formed Concrete Gutters, Class A concrete. NYSDOT 624-2.05, Machine Formed Concrete Gutters, Class J concret).[181,182]

3.8.1.13 Joint Fillers

NYSDOT 705-07, Premoulded Bituminous Joint Filler
NYSDOT 705-02, Asphalt Filler.

3.8.1.14 Curing Compound

NYSDOT 711-05 white pigmented membrane curing compound

3.8.2 CONCRETE TESTING [183]

3.8.2.1 The Contractor shall be responsible to complete concrete compressive strength testing by an independent testing agency approved by the Town to ensure minimum strength requirements are achieved. The approved independent testing agency shall cast the concrete test cylinders during concrete placement.

3.8.2.2 At a minimum, the following testing frequency shall be followed:

a. Compression Test Specimen: ASTM C 31; One composite sample (minimum of 4 cylinders) for each day's pour of each concrete mix exceeding 5 cu. yd, but less than 25 cu. yd., plus one set of four standard cylinders for each additional 50 cu. yd. or fraction thereof. Mold and store cylinders for laboratory cured test specimens except when field-cure test specimens are required. One additional test cylinder will be taken during cold weather concreting, cured on job site under same conditions as concrete it represents.

b. Compressive Strength Tests: ASTM C 39; one set for each 25 cu. yds. or fraction thereof, of each concrete class placed in any one day; one specimen tested at seven days, two specimens tested at 28 days, and one specimen held for testing at 56 days if needed.

c. When frequency of testing will provide less than five strength tests for a given class of concrete, conduct testing from at least five randomly selected batches or from each batch if fewer than five are used.

d. When strength of field-cure cylinders is less than 85% of companion laboratory-cured cylinders, evaluate current operations and provide corrective procedures for protecting and curing the in-place concrete.

e. Strength level of concrete will be considered satisfactory if averages of sets of two consecutive strength test results equal or exceed specified compressive strength, and no individual strength test result falls below specified compressive by more than 500 psi.

3.8.2.3 The approved testing agency shall also conduct slump and air entrainment testing, as well as monitor surface and ambient air temperatures during concrete placement. Any batch of concrete that does not fall within the specified ranges shall be rejected and removed from the site of work. Concrete placed from the rejected batch shall be removed and reconstructed. As a minimum, testing frequency shall be as follows:

a. Slump: ASTM C 143; one test for each concrete load at point of discharge; and one test for each set of compressive strength test specimens.

b. Air Content: ASTM C 231 pressure for normal weight concrete; one for each set of compressive strength test specimens.

c. Concrete Temperature: Test hourly when air temperature is 40º F (4º C) and below, and when 80º F (27º C) and above; and each time a set of compression test specimens are made.

d. Batching: All concrete shall be batched from a NYSDOT accepted automated plant. Batch plant deliveries shall be accompanied with a ticket showing weights of ingredients in loads. Provide the Town Representative or Town Engineer a copy of the ticket at time of delivery.

3.8.3 PREPARATION OF SUBGRADE

Preparation of subgrade shall not be started until all underground utilities are installed, tested, and found acceptable by the Town.

After completion of all underground construction, grade the subgrade surface to the required cross-section and grade, and compact it to form a smooth surface free of ruts, depressions and mounds in accordance with the requirements of Section 3.4.5. Compaction. The final subgrade surface shall not deviate more than 1 inch from the required grade and cross-section.

The Contractor shall notify the Town Highway Superintendent, the Developer's Engineer, and the Engineer for the Town when the subgrade is completed. The completed subgrade shall be proof-rolled with a roller of not less than 10 tons operating weight. The subgrade shall not roll, deflect, displace or show cracking when proof-rolled.

Remove any soft or saturated subgrade material, replace it with granular fill and compact in accordance with requirements for Backfill and Embankments.

Geotextile fabric may be used only after obtaining written approval and where appropriate in the opinion of the Highway Superintendent and the Engineer for the Town. Subgrade shall be undercut to provide minimum thickness of foundation course based on fabric manufacturer's design curves for H25 loading and shear strength of subgrade soil. Soil support value shall be determined in the field by a soils engineer in accordance with AASHTO methods. Design information shall be submitted to the Engineer for the Town for review.

3.8.4 FOUNDATION COURSE

Do not start placing foundation course material until the subgrade is proof-rolled and inspected and approved by the Town Highway Superintendent.

Place, grade and compact the foundation course on completed subgrade surface to the alignment, grade and cross-section shown on the drawings. The subgrade surface shall be free of standing water, snow, ice and frozen material prior to placing the foundation course.

Construct the foundation course in accordance with NYSDOT 304-3. Compaction shall be in accordance with applicable requirements of NYSDOT 203-3.12, and shall provide not less than 95% of the maximum dry weight density of the material as determined by ASTM D698.

Construct the foundation course for roads and streets in two equal lifts to a minimum total compacted thickness of 12 inches. Construct the foundation course for sidewalks and gutters in a single lift to a minimum compacted thickness of 6 inches.

Adjust all manhole and drop inlet frames and covers, valve boxes, and other appurtenances to conform to finished grades.

3.8.5 UNDERDRAIN CONSTRUCTION

The Developer shall[184] install perforated underdrain and crushed stone weeps to drain the subgrade. Construction of underdrain shall not be started until preparation of subgrade is completed.

Excavate the underdrain trench to conform to the detail on the Drawings. Place filter fabric carefully in the trench. Provide sufficient width to allow wrapping of the fabric over the top of the underdrain trench with a minimum of one (1) foot overlap. Transverse splices shall be in accordance with manufacturer's instructions.

Place the underdrain pipe in the trench with perforations in the down position and cap the high end of the pipe.

Stone shall then be carefully placed on the fabric and around the pipe, brought to normal subgrade elevation, and compacted prior to placement of the road base. After the stone has been placed, the filter fabric shall be wrapped over the top of the weep and fastened. Connect underdrain pipe to drop inlets and storm manholes.

3.8.6 PAVEMENT CONSTRUCTION

3.8.6.1 General

After completion of the foundation course and only after inspection and approval by the Town Highway Superintendent, construct pavements to the alignment, grade and cross-section shown on the drawings. The foundation course shall be free of standing water, snow, ice and frozen material prior to and during pavement construction.

The finished pavement surface shall be dense, smooth, free of ruts, ridges, roller marks, cracks, depressions or other irregularities. Any defective pavement that cannot be corrected by additional rolling shall be removed and replaced with new pavement.

Bituminous Material or mixture shall not be applied on any soft surface, when the surface is wet, when the temperature of the surface on which the mixture is to be place is below 45°F, or when other weather conditions would prevent proper construction of the pavement, in accordance with NYSDOT 405-3.01.

Prime and Tack Coats: Minimum surface temperature of 60°F

Asphalt Binder Course: Minimum surface temperature of 45°F and rising at time of placement.

Asphalt Top Course: Bituminous materials shall not be placed on any soft grade, when the grade is wet, when the temperature of the surface on which the mixture is to be placed is below 45°F (below 50°F for 1-inch compacted thickness or less), above 95°F, or when other weather conditions would prevent proper handling or

finishing of asphalt mixtures unless otherwise ordered or approved by the Engineer.

The type of pavement shall be as shown on the drawings and on typical sections.[185]

3.8.6.2 Asphalt Concrete Binder

Binder shall be constructed to a minimum compacted thickness of three (3) inches, or greater thickness as shown on the drawings, in accordance with applicable requirements of NYSDOT 402-3 and 403-3.[186] The material shall be placed with a self-propelled bituminous paver conforming to NYSDOT 402-3.02, and compacted with vibrator type or static steel wheel type roller conforming to NYSDOT 402-3.04.[187] Contractor to place all essential safety markings on binder course.[188]

3.8.6.3 Asphalt Concrete Top

Before placing of the top course, the binder shall be cleaned of mud, dust and debris, and shall be inspected by the Town Highway Superintendent. Tack coat shall be applied at a minimum rate of 0.06 to a maximum rate or 0.1 gallons per square yard before placing the top course. Any depressions or settlements in the binder shall be repaired by shimming before applying the tack coat and placing the top course. Placement shall use a full-size propelled asphalt spreader with a heated screed and rolled in accordance with NYSDOT Specifications 401-3.06 and 401.3.12.[189]

Top course shall be constructed to a minimum compacted thickness of one and a half (1 1/2) inch, or greater thickness as shown on the drawings, in accordance with applicable requirements of NYSDOT 402-3 and 403-3.[190,191]

Placing and compaction shall be as specified for the binder course.

3.8.6.4 Bituminous Surface Treatment

Bituminous surface treatment shall be constructed on completed foundation course in accordance with NYSDOT 410-3.01 - Bituminous Surface Treatment - Pavement, by applying a first course of 0.25 - 0.50 gallons per square yard of bituminous material and 20 - 30 pounds per square yard of crushed stone, followed by a second course of 0.25 - 0.40 gallons per square yard of bituminous material and 15 - 25 pounds per square yard of crushed stone.

Stabilized shoulders shall be constructed on completed foundation course in accordance with NYSDOT 410-3.02 - Bituminous Surface Treatment – Shoulders, by applying 0.4 gallons per square yard of bituminous material followed by 20 - 30 pounds per square yard of crushed stone.[192]

3.8.6.5 Checklist for Top Course[193]

1. Notify Town Construction Inspector and Highway Superintendent at least 48 hours before the commencement of work.
2. Gutters needs 1¼ to 1½ inch reveal. If reveal is not available, milling will be required. To ensure uniformity, the asphalt adjacent to the entire length of the gutter shall be milled. Avoid milling concrete from gutters.
3. Entire road will be cleaned and free of dirt or other debris.

4. Tack coat will be applied at a rate of 0.06 to 0.10 gallons per square yard.
5. Provide a 2% slope along roadway. Cul-de-sac will have design slopes.
6. Shim low spots before pavement is placed. Maximum depth of any shim/top course shall be 2.5 inches maximum to prevent sagging in large fill areas.

3.8.7 CONCRETE GUTTERS

3.8.7.1 General

NYSDOT 703-0201 washed stone weeps [194] shall be provided under all concrete gutters.

Concrete gutters shall be constructed using conventional steel forms or machine forming.

Before setting forms, the foundation course shall be inspected by the Town Highway Superintendent. Any ruts, depressions and soft areas shall be corrected and the surface regraded and thoroughly compacted. The foundation course shall be thoroughly wetted before placing concrete.

Construct concrete gutters where indicated on the drawings in accordance with the Standard Details and NYSDOT 624-3.02.

3.8.7.2 Casting Segments

Conventionally formed gutters shall be cast in 8-foot segments. An 1/8-inch thick separator plate cut to fit the section shall be used in each joint and removed as the concrete hardens, or the gutter may be constructed in alternate sections, 24 hours to elapse before construction of adjacent sections. Construction joints shall be poured full with Asphalt Filler.

3.8.7.3 Conventional Forms

Forms shall be steel, straight, free from warp, and constructed not to interfere with inspection for grade or alignment. All forms shall extend for the fill gutter depth and shall be braced and secured to prevent displacement from alignment during placing of concrete.

3.8.7.4 Concrete Placing and Finishing

Concrete shall be placed in conventional forms in accordance with the applicable requirements of NYSDOT 555-3.04. Excess concrete shall be screeded off perpendicular to the flow line of the gutter. Forms shall be left in place for 24 hours or until the concrete has sufficiently hardened, as determined by the Engineer, so that they can be removed without damage to the gutter.

The gutters shall be finished to produce a smooth surface and then lightly broomed to a uniform texture.

3.8.7.5 Machine Forming

Gutter shall be machine formed to the proper line and grade. The Engineer may require the Contractor to demonstrate that the specific equipment he proposes to use is capable of satisfactorily placing the concrete mix.

Any gutter placed outside of tolerance of 1/2 inch of the established line or 1/4 inch of the established grade shall be removed and replaced at the Contractor's expense.

Maximum placement slump shall be 2 inches[195]. Air content shall be within +1% of design.

3.8.7.6 Contraction Joints

Contraction joints for machine formed gutter shall be spaced every 10 feet and formed or sawcut 1/8" wide and 3/4" deep. The sawcut or formed joints shall be left unfilled.

3.8.7.7 Expansion Joints

Expansion joints for conventionally formed and machine formed gutter shall be 1/2-inches wide and shall be formed with Joint Filler, placed at intervals not to exceed 50 feet. The filler material shall be cut to conform to the cross-section of the gutter and shall extend the full width and depth of the gutter.

3.8.7.8 Concrete Curing

Curing shall comply with the requirements of NYSDOT 502-3.11, Curing. NYSDOT 711-05 white pigmented membrane curing compound shall be applied by spraying in accordance with manufacturer's instructions upon initial setting of the concrete.[196]

3.8.7.9 Protection

The Contractor shall keep the gutter clean, aligned, and protected from damage until final acceptance of the work. Any gutter damaged prior to the final acceptance of the work shall be repaired or replaced at the Contractor's expense.

3.8.8 CONCRETE SIDEWALKS

3.8.8.1 General

Before setting forms, the foundation course shall be inspected by the Town Highway Superintendent. Any depressions, ruts and soft areas shall be corrected and the surface regraded and thoroughly compacted. The foundation course shall be thoroughly wetted before placing of concrete.

Construct concrete sidewalks where shown on the drawings in accordance with the Standards Details and NYSDOT 608-3.01.

3.8.8.2 Forms

Forms shall be steel, straight, free from warp and constructed not to interfere with screeding of concrete. Wood forms may be used only for curved sections. All forms shall extend the full 5-inch depth of the sidewalk and shall be braced and secured to prevent displacement of alignment during placing of concrete.

3.8.8.3 Concrete Placing and Finishing

Concrete shall be placed to the full depth as shown on the drawings and in the Standard Details.

Transverse construction joints shall extend to the full depth of the slab and shall be spaced 20 to 25 feet apart. The edges of joints shall be finished with an edging tool having a 1/4-inch radius.

A premolded bituminous joint filler 1/2-inch thick shall be installed at all construction joints and joints between sidewalk and curb, pavement and buildings.

The concrete surface shall be scored at intervals of three to five feet so that the finished walk will be marked in squares. The concrete shall be finished to produce a smooth surface and then lightly broomed to a uniform texture.

3.8.8.4 Curing

Curing shall comply with the requirements of NYSDOT 502-3.11, Curing. NYSDOT 711-05 white pigmented membrane curing compound shall be applied by spraying in accordance with manufacturer's instructions upon initial setting of the concrete.[197]

3.8.8.5 Protection

The Contractor shall keep the sidewalk clean and protected from damage until final acceptance of the work. Any sidewalk damaged prior to the final acceptance of the work shall be repaired or replaced at the Contractor's expense.

3.8.8.6 Detectable Warnings

Install dark gray precast polymer panel, or cast iron,[198] detectable warnings during construction of sidewalk curb ramps.

3.8.9 STREET AND TRAFFIC SIGNS

3.8.9.1 Street Signs

Temporary signs shall be installed at each street intersection when construction of new roadways allow passage by vehicles.[199] Street signs shall be provided at all street intersections, shall be of the type approved by the Town Highway Superintendent, and shall conform to the requirements of NYS Manual of Uniform Traffic Control Devices.

3.8.9.2 Traffic Signs

Traffic signs shall be provided at intersections designated by the Town Highway Superintendent and shall conform to the requirements of NYS Manual of Uniform Traffic Control Devices.

3.8.10 MONUMENTS

Monuments shall be 4-inch diameter or square cast-in-place concrete 36 inches long, with a 5/8-inch steel reinforcing rod embedded in the center. The top of the rod shall serve as the point of reference.

Monuments shall be installed plumb, with the top set lower than adjacent finished grade, at the locations shown on the approved final plans and staked out by a Licensed Surveyor. Fill the space around the monument with thoroughly compacted dry concrete.[200]

3.8.11 PROPERTY CORNER MARKERS

During construction lots may be staked with wood hubs. After construction and final grading is completed, permanent corner markers consisting of 3/4-inch diameter solid steel rod 24-inches long shall be set by a Licensed Surveyor at all corners of each lot.

The top of the rod shall be set 1/4-inch lower than adjacent finished grade.

At the option of the property owner, monuments conforming to Section 3.8.10[201] may be used in lieu of steel rods.

3.8.12 CONSERVATION EASEMENT MARKERS AND BOUNDARY PINS

Boundary pins consisting of 3/4-inch diameter solid steel rod 24-inches long with the top set 1/4-inch lower than adjacent finished grade shall be set by a Licensed Surveyor.

Conservation easement markers shall be one of the following:

3.8.12.1 [202] Pressure treated 4" x 4" wood posts, six (6) feet long, installed plumb, with the top set three (3) feet above adjacent finished grade, located within 12 inches of the conservation easement boundary pins.

3.8.12.2 Brown fiberglass posts, five (5) feet long, with pull out anchors, Glas-Flex (GFX) as supplied by Rockart, Inc., or equal as approved by the Town, set plumb, with the top set three (3) feet above adjacent finished grade, located within 12 inches of the conservation easement boundary pins.

3.8.12.3 In lawn areas, alternate durable, visible natural markers may be used in lieu of 3.8.12.1 and 3.8.12.2 above, and shall be located within 10 feet of the conservation easement boundary pins. Such alternate markers shall be submitted in advance for approval by the Town.

A sign, as approved by the Town, shall be attached to all markers, and shall include the following information: "Town Conservation Easement - Restricted Use. Call 742-5035". This sign is available from the Town.

3.8.13 TOWN ROAD CROSSINGS

Town road crossings shall be made by boring unless specific approval is granted by the Town Highway Superintendent for open cut. If crossing by open cut is approved, the road shall be repaired in accordance with the Standard Detail of Typical Town Road Crossing Repair. All crossings shall require casing in accordance with NYSDOT Specification Section 650 – Trenchless Installation of Casing.[203]

SECTION 4.0 STANDARD APPROVAL CONDITIONS

SECTION 4.0 STANDARD APPROVAL CONDITIONS

4.1 STANDARD APPROVAL CONDITIONS FOR ALL SUBDIVISIONS (MAJOR & MINOR)

A. The following conditions must be met prior to the Chairman signing the final subdivision plat:

1. That all requirements for preliminary submission be met as outlined under Section 184-13 of the Town of Victor Subdivision Regulations.

2. That plantings as required under Section 184-16, paragraph C-7 of the Subdivision Regulations of the Town of Victor be shown on the final plan.

3. That if new water transmission lines are to be installed which require Department of Health Approval of Plans, applicant must submit Form DOH-348 to the Monroe County Water Authority.[204]

4. That if new sanitary sewer lines are to be installed which require Department of Environmental Conservation approval, applicant must submit Form BSP-5 to the Planning Department for processing. The Town Supervisor will not sign the form until the final subdivision mylars have been signed by the Planning Board Chair.[205]

5. That if a Water Supply Permit is required by the Department of Environmental Conservation, said application be made.

6. That tree species to be planted shall be subject to Town approval.

7. 8a. That a sewer district or sewer district extension shall be established. The Town Engineer's letter of recommendation for approval shall address the disposition of all districts and/or district extensions included as part of the project.

   8b. That a water benefitted area or water district extension shall be established. The Town Engineer's letter of recommendation for approval shall address the disposition of all districts and/or district extensions included as part of the project.[206]

8. That a sewer district and/or water benefitted area shall be established as required and identified in the Town Engineer's final review letter. Application is to be submitted to the Town Clerk prior to the Chairman signing the subdivision plans.

9. That easement descriptions (such as sewer, drainage, conservation, trail, access, utility, etc.) as identified in the Town Engineer's final review letter shall be submitted to the Planning Department. Town Engineer approval of the descriptions must be secured prior to the Chairman's signature of the final plans.[207]

10. Stormwater Control Facility Maintenance Agreement.

11. That easement language is to be in a format acceptable to the Attorney for the Town and filed at the Ontario County Clerk's Office prior to the Chairman's signature on final plans.

12. The Developer shall submit two (2)[208] copies of electronic files of approved Subdivision Plans along with the film original(s) to the Town.

13. That a right-of-way naming and address numbering application be submitted to request approval of the street names from Ontario County.

14. Prior to the Chairman of the Planning Board signing a final subdivision plan or site plan, that has undergone Town Engineer review, the same must first be signed by the Town Engineer.

15. Conditional approval. Upon resolution of conditional approval, the Planning Board shall empower a duly authorized officer to sign the plat, subject to completion of such requirements as may be stated in the resolution. Conditional approval shall expire within 180 days after the date of the resolution granting conditional approval unless all such requirements are completed. This period may be extended by the Planning Board for up to two ninety-day periods beyond the one-hundred-eighty-day initial period. Within five days of the resolution of conditional approval, the plat shall be certified by the Secretary of the Planning Board as conditionally approved and a copy filed in such Secretary's office.[209]

B. The following conditions must be met prior to project construction commencing:

16. New York State Department of Health Approval of Water System Plans be secured.

17. New York State Department of Environmental Conservation Approval of Sanitary Sewer Plans be secured.

18. New York State Department of Environmental Conservation Notice of Intent for coverage under the NYSDEC SPDES General Permit for Stormwater Discharges from Construction Activity and a signed certification page from the Stormwater Pollution Prevention Plan.

19. That proper steps be taken to file the subdivision map as soon as possible in the office of the Ontario County Clerk and that receipt showing that this has been accomplished be submitted to the Planning Board office immediately thereafter. Maps are to be filed within sixty (60) days of the date of the approval (signed by the Chairman). Such map shall include a certificate of the tax collecting office of any county, city, town or village in which such property is situated, stating that all outstanding taxes have been paid.

20. That a letter of credit or escrow account be filed with the Town of Victor in an amount acceptable to the Engineer for the Town and the Town Board and in a format acceptable to the Attorney for the Town, to cover development cost of the grading, site work, road(s), water distribution system, drainage, detention/retention pond, erosion control measures, Landscaping of Common areas, sanitary sewer and storm sewer prior to the date of a pre-construction meeting.[210] Individual residential lot landscaping shall not be included in the surety.[211]

21. That a separate check be provided to the Town of Victor for the Town fees for construction administration and inspection prior to the date of a preconstruction meeting, in accordance with Section 1.4.

22. That a pre-construction meeting be held prior to commencement of the project with all principals involved. [212]

C. The following conditions must be met prior to a building permit being issued:

23. That the road base, sidewalks, if applicable, all public utilities, and all drainage facilities be installed.

24. That prior to the issuance of a building permit for a house with a walkout basement, grading and drainage plans shall be submitted for the Town Engineer's review and approval.

25. That prior to issuance of a building permit, the Town Engineer must inspect the public sewer and determine that connection is appropriate.[213]

26. That the buildings shall conform to the New York State Building and Fire Codes.

27. Pursuant to Section 27-8J of the Town Code, a recreation fee for each lot, or in the event of a multiple dwelling, a recreation fee for each family unit, in lieu of park land shall be paid to the Town before issuance of a building permit.[214]

D. The following conditions must be met prior to a Certificate of Occupancy being issued:

28. The road gutters and road binder be installed and completed or that adequate surety remain and/or be posted by the developer to assure completion.

29. That monuments and corner markers be installed in accordance with the Town of Victor Design and Construction Standards for Land Development.

30. That Record Drawings be filed with the Building Department before issuance of the Certificate of Occupancy showing the exact location of the buildings, including finished elevations and all other structures on the site with dimensions from side lot lines, street lines, rear lot lines, and swing ties to any sanitary clean-out, storm clean-out and water main shut off. All easements must be delineated and labeled[215]. In addition, finished contours shall be shown at one (1) foot intervals based on a field survey by a Licensed Land Surveyor and certified by the Surveyor that finished grading conforms to the grading plan approved by the Planning Board.

31. That right-of-way curb cut permits on state highways be obtained from the New York State Department of Transportation, 125 Parrish Street, Canandaigua, NY 14424.

32. That the proposed location and installation, where required, of all street signs shall be provided to be approved by the Town Highway Superintendent and shall conform to the requirements of the NYS Manual of Uniform Traffic Control Devices.

33. That the developer shall be responsible for the installation of intersection lighting (RG&E).

34. That a sprinkler system be installed if required by Local Law No. 4-2011, Chapter 83, CONSTRUCTION CODES, UNIFORM adopted by the Town Board of the Town of Victor on March 28,2011.[216]

35. That prior to issuance of a Certificate of Occupancy for a commercial or industrial building, the Town Engineer shall determine that the project is substantially in compliance with the approved site plan and applicable subdivision approvals, including, but not limited to drainage improvements, grading, landscaping, and location of building and parking. The building permit applicant is responsible for the Town Engineer Certificate of Occupancy inspection.

36. That building numbers comply with Local Law No. 17-1996, Chapter 74 BUILDINGS, NUMBERING OF adopted by the Town Board on November 25, 1996.

37. That all terms and conditions set forth in applicable Zoning Board of Appeals variances be followed.

38. That all utilities including electric and cable television, if applicable, be underground.

E. The following conditions are standard conditions that must be adhered to:

39. That the applicant comply with all the requirements and requests of the New York State Department of Transportation, the Ontario County Highway Department and/or the Town of Victor Highway Department, as applicable.

40. That landscaping will be required and will be considered at the time of Site Plan review for each individual application.

41. That any driveway relocation in a major thoroughfare must be brought back before the Planning Board for review and approval.

42. Planning Board approval does not constitute either a building permit or a Certificate of Occupancy.

4.2 ***ADDITIONAL* STANDARD APPROVAL CONDITIONS FOR MAJOR SUBDIVISIONS ONLY**

A. The following conditions must be met prior to the Chairman signing the final subdivision plan:

1. That if cable television is available in the area, that the cable television company be notified at this time and a letter be sent to the Town from cable television company stating that they have been so notified.

B. The following conditions must be met prior to a Certificate of Occupancy being issued:

2. The developer shall provide trenching for underground cable television. Timely notification for placement of the cable equipment shall be made by the developer to the cable television company and shall coincide with the notification and installation of other underground utilities. The cable television company, in accordance with its franchise agreement, shall provide the necessary cable equipment and installation provided that it receives timely notification.

3. That individual homeowners lamp post be installed. Lamp posts would be required prior to issuance of a Certificate of Occupancy. The lamps shall have photoelectric devices and be maintained by the property owner. Lamp posts shall have uniform location and style. Lamp posts shall be operated from dusk until dawn.

C. The following on-going standard conditions must be adhered to:

4. That sketch plan approval shall expire after six (6) months. An extension may be requested.

5. That preliminary plan approval shall expire after six (6) months. An extension may be requested.

4.3 *ADDITIONAL* STANDARD APPROVAL CONDITIONS FOR MINOR SUBDIVISIONS ONLY

A. The following conditions must be met prior to the Chairman signing the final subdivision plan:

1. Conditional approval. Upon resolution of conditional approval, the Planning Board shall empower a duly authorized officer to sign the plat, subject to completion of such requirements as may be stated in the resolution. Conditional approval shall expire within 180 days after the date of the resolution granting conditional approval unless all such requirements are completed. This period may be extended by the Planning Board for up to two ninety-day periods beyond the one-hundred-eighty-day initial period. Within five days of the resolution of conditional approval, the plat shall be certified by the Secretary of the Planning Board as conditionally approved and a copy filed in such Secretary's office.[217]

4.4 STANDARD APPROVAL CONDITIONS FOR SITE PLANS

A. The following conditions must be met prior to the Chairman signing the site plan:

1. That site plan approval shall expire after 180 days from the date of the resolution granting conditional approval unless all conditions therein are satisfied. This period may be extended by the Planning Board for up to two ninety-day periods at the discretion of the Planning Board. Upon expiration of site plan approval, the site plan approval will become null and void and the applicant will be required to resubmit a complete site plan application. In the event that a building permit expires or is canceled, the site plan approval shall expire.[218]

2. That tree species to be planted shall be subject to Town approval.

3. That if new water transmission lines are to be installed which require Department of Health Approval of Plans, applicant must submit Form DOH-348 to the Monroe County Water Authority.[219]

4. That if new sanitary sewer lines are to be installed which require Department of Environmental Conservation approval, applicant must submit Form BSP-5 to the Planning Department for processing.

5. That easement descriptions (such as sewer, drainage, conservation, trail, access, utility, etc.) as identified in the Town Engineer's final review letter shall be submitted to the Planning Department. Town Engineer approval of the descriptions must be secured prior to the Chairman's signature of the final plans.[220]

6. Stormwater Control Facility Maintenance Agreement.

7. The Developer shall submit two (2) copies of electronic files of approved Site Plans along with the film original(s) to the Town. [221]

8. That easement language is to be in a format acceptable to the Attorney for the Town and filed at the Ontario County Clerk's Office prior to the Chairman's signature on final plans.

9. Prior to the Chairman of the Planning Board signing a final subdivision plan or site plan, that has undergone Town Engineer review, the same must first be signed by the Town Engineer.

B. The following conditions must be met prior to project construction commencing:

10. That right-of-way or curb cut permits be obtained from the New York State Department of Transportation, 125 Parrish Street, Canandaigua, NY 14424.

11. New York State Department of Health Approval of Water System Plans be secured.

12. New York State Department of Environmental Conservation Approval of Sanitary Sewer Plans be secured.

13. New York State Department of Environmental Conservation Notice of Intent for coverage under the NYSDEC SPDES General Permit for Stormwater Discharges from Construction Activity and a signed certification page from the Stormwater Pollution Prevention Plan.

14. That a letter of credit or escrow account be filed with the Town of Victor in an amount acceptable to the Engineer for the Town and the Town Board and in a format acceptable to the Attorney for the Town, to cover development cost of the grading, site work, road(s), water distribution system, drainage, detention/retention pond, erosion control measures, street trees, sanitary sewer and storm sewer and town fees for construction administration and inspection prior to the Chairman's signature on final plans.

C. The following conditions must be met prior to a building permit being issued:

15. That the buildings shall conform to the New York State Building and Fire Codes.

D. The following conditions must be met prior to a Certificate of Occupancy being issued:

16. That prior to issuance of a Certificate of Occupancy, the Town Engineer must inspect the public sewer and determine that connection is appropriate.[222]

17. That the Town of Victor “Final Grade & Seed Policy” be adhered to prior to issuance of the Certificate of Occupancy. In the event that the soil conditions do not permit installation of the landscaping, a Conditional Certificate of Occupancy may be issued[223].

18. That the Developer provides the curb box at grade elevation. If a Conditional Certificate of Occupancy is issued prior to installation of landscaping (See Item 19, above), the curb box shall be inspected for damage and to ensure that it is at grade, following the completion of the landscaping, but prior to issuance of a Certificate of Occupancy without conditions.[224]

19. That prior to issuance of a Certificate of Occupancy for a commercial or industrial building, the Town Engineer shall determine that the project is substantially in compliance with the approved site plan and applicable subdivision approvals, including, but not limited to drainage improvements, grading, landscaping, and location of building and parking. The building permit applicant is responsible for the cost of Town Engineer Certificate of Occupancy-related inspection.[225]

20. That no Certificate of Occupancy shall be issued for the building nor shall occupancy of the building be taken until the binder coat or oil and chip coat be in place on the proposed road.

21. That the water service be installed under the Town road at the owner's expense and to the satisfaction of the Highway Superintendent.[226]

22. That no outside storage be permitted except in the designated areas. Equipment contained within those areas shall be fully screened from view of the road and/or adjoining properties.

23. That all terms and conditions set forth in applicable Zoning Board of Appeals variances be followed.

24. That, where required by approved site plan,[227] all roadways and parking area shall be paved.

25. That, where required by approved site plan,[228] visual buffering shall be provided.

26. That a sprinkler system be installed if required by Local Law No. 4-2011, Chapter 83, CONSTRUCTION CODES, UNIFORM adopted by the Town Board of the Town of Victor on March 28, 2011.[229]

27. That building numbers comply with Local Law No. 17-1996, Chapter 74 BUILDING NUMBERING OF adopted by the Town Board on November 25, 1996.

E. The following on-going standard conditions must be adhered to:

28. That all utilities including electric and cable television, if applicable, be underground.

29. That the size of the driveway culvert be determined by the Town of Victor Highway Superintendent.

30. That the applicant comply with all of the requirements and requests of the New York State Department of Transportation, Ontario County Highway Department and/or Town of Victor Highway Department.

31. That any driveway relocation in a major thoroughfare must be brought back before the Planning Board for review and approval.

32. That the developer has been advised that the Town may not be able to provide required fire flows to meet Insurance Services Office (ISO) standards.

33. Planning Board approval of site plan does not constitute either a building permit or a Certificate of Occupancy.

SECTION 5.0 RESERVED

SECTION 6.0 STANDARD DETAILS

SECTION 6.0 STANDARD DETAILS

STANDARD DETAIL INDEX

Dwg No.	Title
ESC-1	Extended Stabilized Construction Entrance
RS-1	Concrete Sidewalk[230,231]
RS-2	Concrete And Granite Curb
RS-3	Concrete Gutter With Stone Weep
RS-4	Gutter Inlet
RS-5	Special Gutter Inlet
RS-6	Driveway Layout
RS-7	Typical Cul-De-Sac Layout Detail
RS-8	Typical Roadway Turn-Around
RS-9	Typical Roadway Sections - Alternate A
RS-10	Typical Roadway Sections - Alternate B
RS-11	Typical Driveway Sections
RS-12	Typical Major Commercial & Industrial Subdivision Road Entrance
RS-13	Mountable Curb
RS-14	Commercial & Industrial Subdivision Road Entrance Island Nose
RS-15	Monument And Property Corner Marker Detail
RS-16	Decorative Timber Guide Rail
RS-17	Temporary Pavement[232]
SA-1	Precast Concrete Sanitary Manhole Detail
SA-2	Precast Concrete Sanitary Manhole With Eccentric Top Detail
SA-3	Sanitary Sewer Outside Drop Connection
SA-ST-4	Sanitary & Storm Sewer Lateral Detail
SA-ST-5	Sanitary & Storm Sewer Lateral
SA-6	Tee Lateral Connection to Sewer Main[233]
SA-7.1	High Flow Pump Station[234]
SA-7.2	High Flow Pump Station[235]
SA-7.3	High Flow Pump Station[236]
SA-8	Low Flow Pump Station[237]
SA-9	Pump Station Notes & Requirements[238]
SA-10	Inside Drop Sewer Manhole[239]
SA-11	Dog House Sewer Manhole[240]
ST-1	Storm Sewer Drainage Manhole Set In Pavement Or Grass

ST-2	Storm Sewer Drainage Inlet Placed In Gutter
ST-3	Storm Sewer Drainage Inlet Set In Pavement Or Grass
TR-1	HDPE, PVC & DIP / Storm & Sanitary Sewer Pip Trench Detail[241]
TR-2	Rigid Pipe Storm & Sanitary Sewer Pipe Trench Detail
TR-3	HDPE & PVC Perforated Pipe Storm Sewer Bedding Detail
TR-4	Typical Trench Section In Non-Roadway Pavement Areas
TR-5	Typical Trench Section Crossing Existing Town Road[242]
WS-1	Water And Sewer Horizontal Separation
WS-2	Water Main And Sewer Crossing Vertical Separation Less Than 18”
WS-3	Water Main And Sewer Crossing

1. Note: All standard details have been revised to reflect current construction standards and materials.[243]

2. For water improvement details, see Uniform Design and Construction Standards for Extending Water Distribution Systems, Section 5, by Monroe County Water Authority.[244]

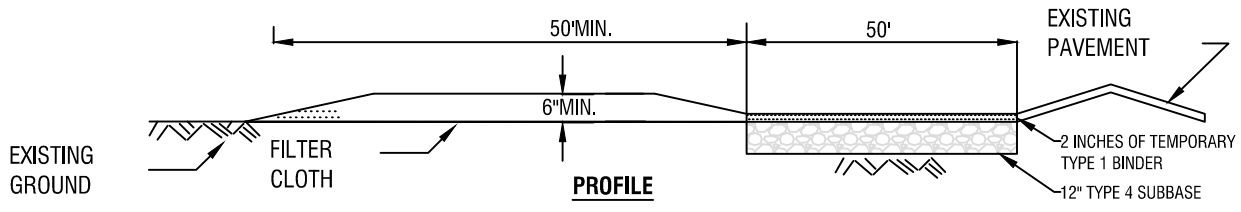

PROFILE

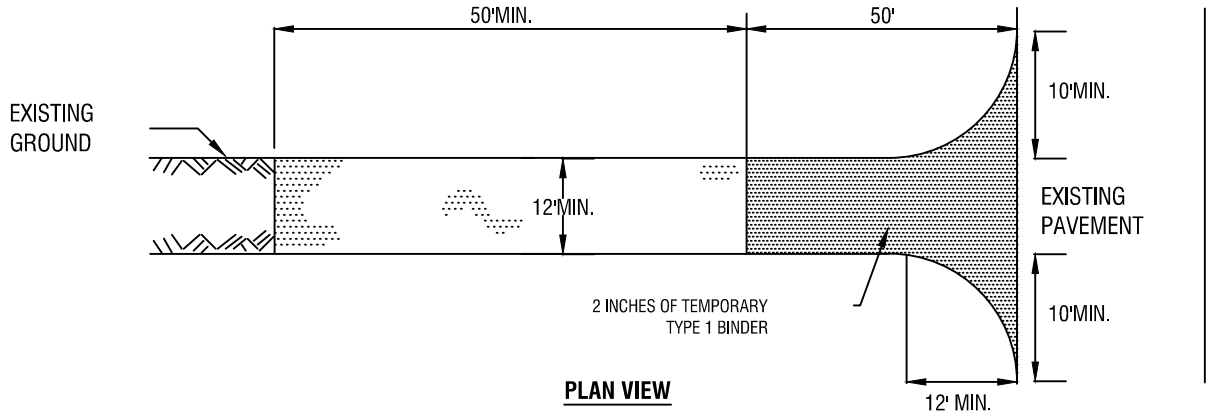

PLAN VIEW

CONSTRUCTION SPECIFICATIONS

1. STONE SIZE - USE 1-4 INCH STONE, OR RECLAIMED OR RECYCLED CONCRETE EQUIVALENT.
2. LENGTH - NOT LESS THAN 50 FEET (EXCEPT ON A SINGLE RESIDENCE LOT WHERE A 30 FOOT MINIMUM LENGTH WOULD APPLY).
3. THICKNESS - NOT LESS THAN SIX (6) INCHES.
4. WIDTH - TWELVE (12) FOOT MINIMUM, BUT NOT LESS THAN THE FULL WIDTH AT POINTS WHERE INGRESS OR EGRESS OCCURS. TWENTY-FOUR (24) FOOT IF SINGLE ENTRANCE TO SITE.
5. GEOTEXTILE - WILL BE PLACED OVER THE ENTIRE AREA PRIOR TO PLACING OF STONE.
6. SURFACE WATER - ALL SURFACE WATER FLOWING OR DIVERTED TOWARD CONSTRUCTION ACCESS SHALL BE PIPED BENEATH THE ENTRANCE. IF PIPING IS IMPRACTICAL, A MOUNTABLE BERM WITH 5:1 SLOPES WILL BE PERMITTED.
7. MAINTENANCE - THE ENTRANCE SHALL BE MAINTAINED IN A CONDITION WHICH WILL PREVENT TRACKING OR FLOWING OF SEDIMENT ONTO PUBLIC RIGHTS-OF-WAY, ALL SEDIMENT SPILLED, DROPPED, WASHED OR TRACKED ONTO PUBLIC RIGHTS-OF-WAY MUST BE REMOVED IMMEDIATELY.
8. WHEN WASHING IS REQUIRED, IT SHALL BE DONE ON A AREA STABILIZED WITH STONE AND WHICH DRAINS INTO AN APPROVED SEDIMENT TRAPPING DEVICE.
9. PERIODIC INSPECTION AND NEEDED MAINTENANCE SHALL BE PROVIDED AFTER EACH RAIN.

town of VICTOR NEW YORK

ALL CONSTRUCTION TO CONFORM TO SPECIFICATIONS WRITTEN IN THE VICTOR D&C STANDARDS

EXTENDED STABILIZED CONSTRUCTION ENTRANCE

NOT TO SCALE

DECEMBER 2023

ESC-1

DATE/TIME: Thursday, November 30, 2023 AT 3:24 PM
FILENAME: \\CASH.lab\P\V\Victor, Town Of\208375 - General Consultation\208375.004 - Annual Update Design & Const\Drawings\2024 Changes\2024 ESC-1.dwg

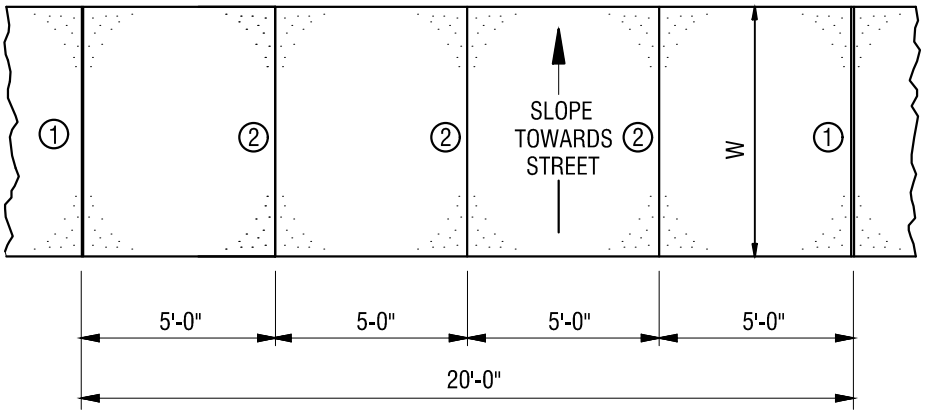

1 EXPANSION JOINT WITH PREMOLDED RESILIENT JOINT FILLER

2 CONTRACTION / CRACK CONTROL JOINT, TROWEL OR SAW-CUT

PLAN

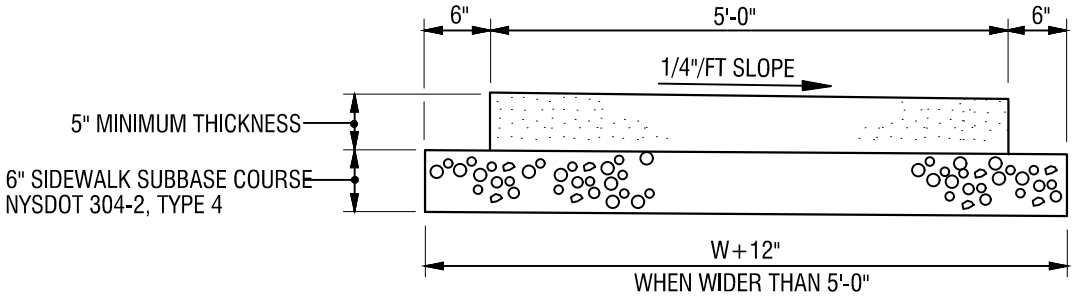

SECTION

NOTES:

1) REFER TO TOWN OF VICTOR DESIGN AND CONSTRUCTION STANDARDS FOR LAND DEVELOPMENT - SECTION 2 & 3, NYSDOT 608-3.01 PORTLAND CEMENT CONCRETE SIDEWALKS AND DRIVEWAYS, USFHA & ADA REQUIREMENTS.
2) CONCRETE SHALL CONFORM TO NYSDOT SECTION 501, NYSDOT CLASS D CONCRETE FOR CONVENTIONAL FORMED CONCRETE AND NYSDOT CLASS J CONCRETE FOR MACHINE FORMED CONCRETE. ALL CONCRETE SHALL INCLUDE FIBER PER SECTION 3.8.1.11.
3) IMMEDIATELY AFTER PLACEMENT OF CONCRETE, THOROUGHLY COMPACT CONCRETE WITH MECHANICAL VIBRATING EQUIPMENT. THE USE OF MECHANICAL SCREEDING OR FINISHING EQUIPMENT (SUCH AS A JITTERBUG) SHALL NOT BE ALLOWED. ONLY HAND SCREEDING AND FINISHING SHALL BE ALLOWED.
4) NYSDOT 711-05 WHITE PIGMENTED MEMBRANE CURING COMPOUND SHALL BE APPLIED IMMEDIATELY AFTER FINISHING CONCRETE SURFACE IN ACCORDANCE WITH NYSDOT 502-3.11 AT A RATE OF 1.5 GALLONS PER 150 S.F. APPLY TO ALL EXPOSED SURFACES.
5) WHEN SIDEWALK AND CONCRETE CURB ARE PLACED ADJACENT TO ONE ANOTHER #4 REBAR SHALL BE DRILLED AND GROUTED OR PUSHED INTO BACK OF NEW CURB AT 2'-0" ON CENTER MAX. PLACE 6 MIL. PLASTIC BOND BREAKER THE DEPTH OF NEW SIDEWALK ON BACK OF CURB PRIOR TO POURING NEW SIDEWALK.

town of VICTOR NEW YORK

ALL CONSTRUCTION TO CONFORM TO SPECIFICATIONS WRITTEN IN THE VICTOR D&C STANDARDS

CONCRETE SIDEWALK DETAIL

NOT TO SCALE

DECEMBER 2023

RS-1

DATE/TIME: Thursday, December 14, 2023 AT 10:12 AM
FILENAME: \\CASH.lab\P\V\Victor, Town Of\208375 - General Consultation\208375.004 - Annual Update Design & Const\Drawings\2023 Changes\2023 RS-1.dwg

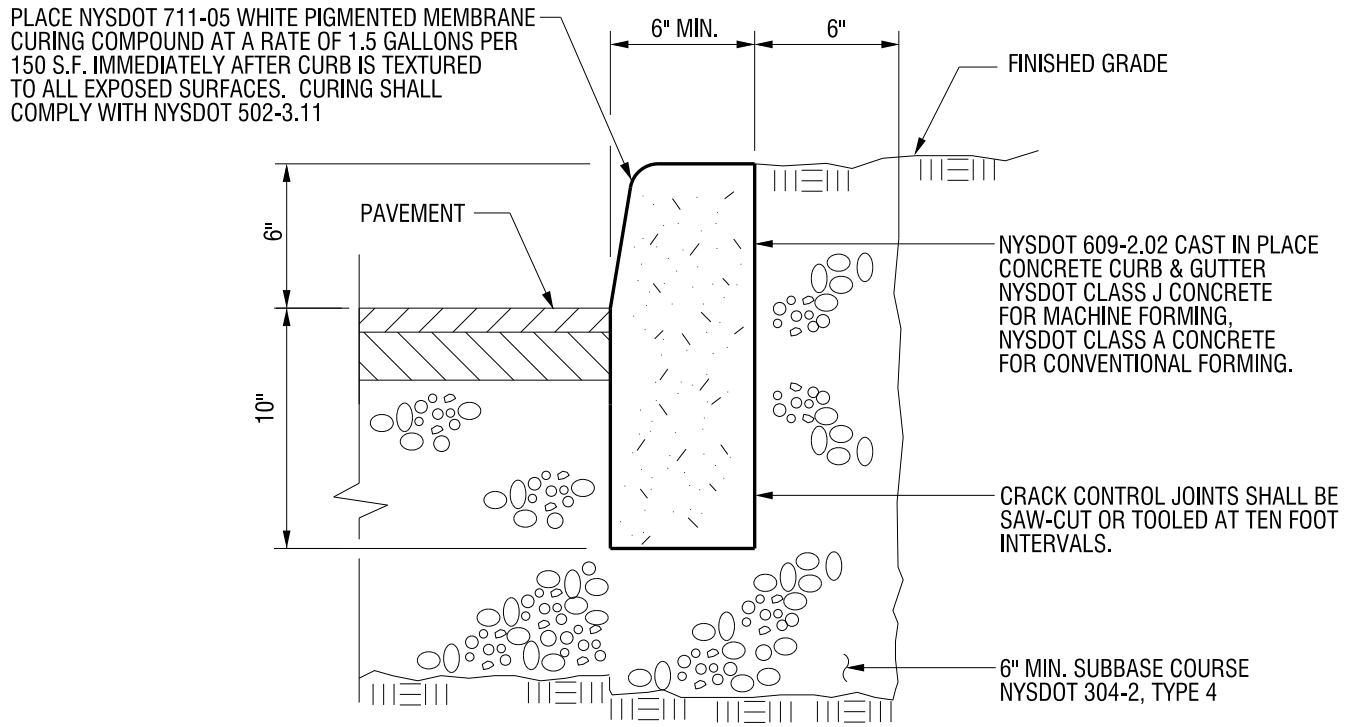

CONCRETE CURB

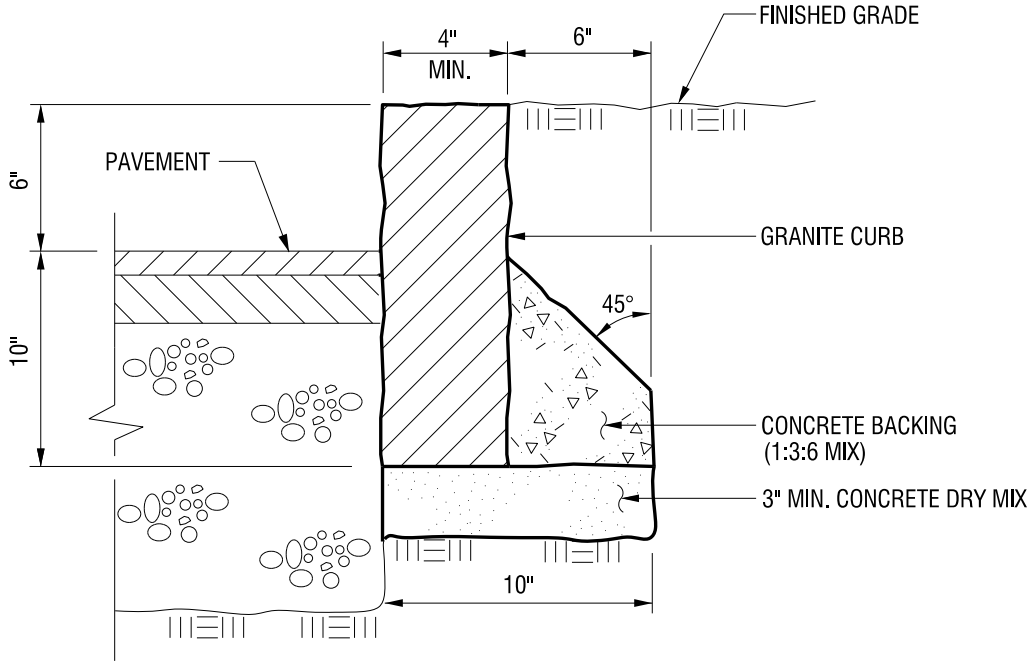

GRANITE CURB

TOWN OF VICTOR NEW YORK

ALL CONSTRUCTION TO CONFORM TO SPECIFICATIONS WRITTEN IN THE VICTOR D&C STANDARDS

CONCRETE AND GRANITE CURB DETAIL

NOT TO SCALE

JANUARY 2014

RS-2

DATE/TIME: Thursday, February 06, 2014 AT 7:13 AM
FILENAME: J:\Victor, Town Of\208375 - General Consultation\208375.004 - Annual Update Design & Const\2014 Standrads\2014 Updates Victor D&C Standard Details\RS-2.Dgn

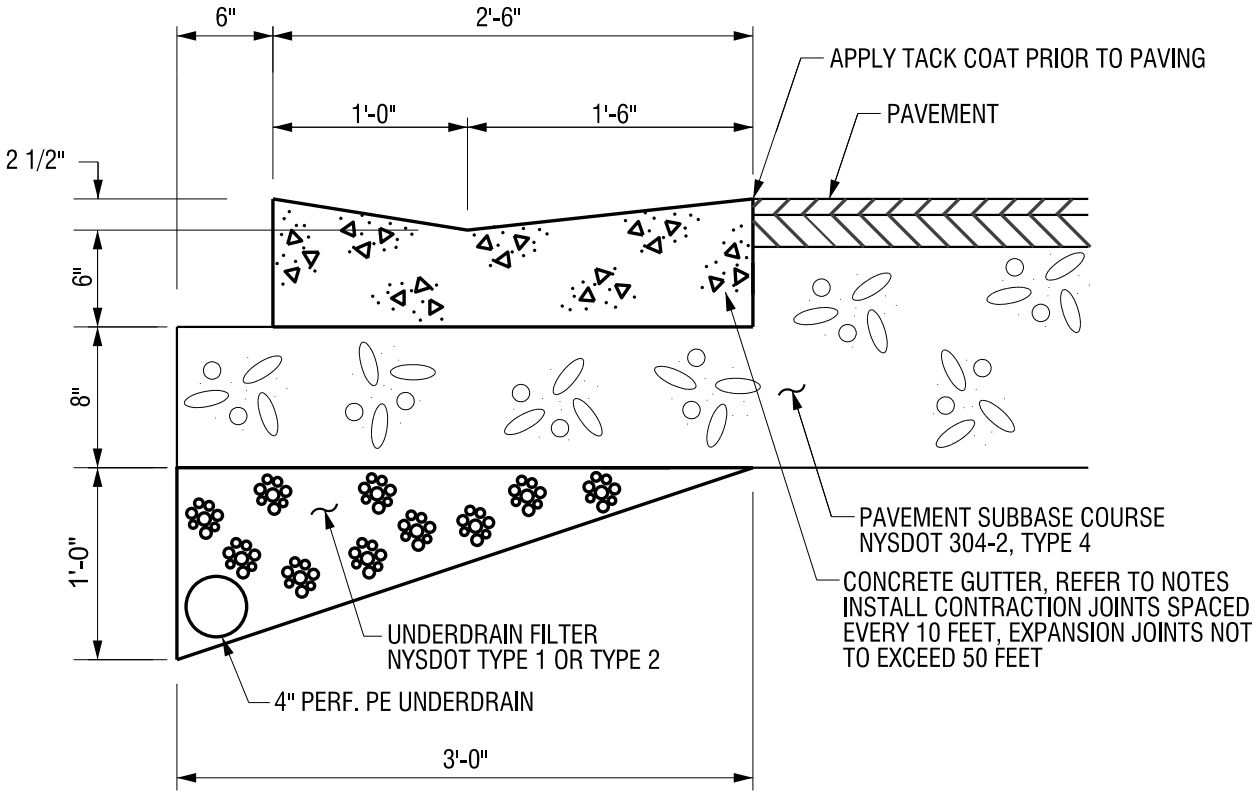

NOTES:

1. REFER TO TOWN OF VICTOR DESIGN AND CONSTRUCTION STANDARDS FOR LAND DEVELOPMENT - SECTION 2 & 3 AND NYSDOT SECTION 609 CURB & GUTTER.
2. CONCRETE SHALL CONFORM TO NYSDOT 501, NYSDOT CLASS A CONCRETE FOR CONVENTIONAL FORMED CONCRETE AND NYSDOT CLASS J CONCRETE FOR MACHINE FORMED CONCRETE.
3. FOR CONVENTIONAL FORMED GUTTERS, IMMEDIATELY AFTER PLACEMENT OF CONCRETE, THOROUGHLY COMPACT CONCRETE WITH MECHANICAL VIBRATING EQUIPMENT. THE USE OF MECHANICAL SCREEDING OR FINISHING EQUIPMENT (SUCH AS A JITTERBUG) SHALL NOT BE ALLOWED. ONLY HAND SCREEDING AND FINISHING SHALL BE ALLOWED.
4. NYSDOT 711-05 WHITE PIGMENTED MEMBRANE CURING COMPOUND SHALL BE APPLIED IMMEDIATELY AFTER FINISHING CONCRETE SURFACE IN ACCORDANCE WITH NYSDOT 502-3.11 AT A RATE OF 1.5 GALLONS PER 150 S.F. APPLY TO ALL EXPOSED SURFACES.
5. WASHED CRUSHED STONE WEEPS NYSDOT 703-0201, SHALL BE PLACED DURING ROADBOX SUBGRADE CONSTRUCTION ALONG ENTIRE PORTION OF ROADWAY AND ROADWAY INTERSECTIONS WHEN STANDARD UNDERDRAIN PIPE AND TRENCH ARE NOT USED. 4" PERFORATED POLYETHYLENE UNDERDRAIN PIPE SHALL BE PLACED ON THE BACK SIDE OF THE WEEP EXTENDING A MINIMUM OF 10 FEET FROM BOTH SIDES OF DRAINAGE INLETS. WHEN DRAINAGE INLETS ARE PLACED IN ROADWAY LOW AREAS, UNDERDRAIN PIPE SHALL EXTEND 20' FROM BOTH SIDES OF DRAINAGE INLETS ALONG THE ROADWAY.
6. WASHED STONE WEEPS SHALL BE PLACED PRIOR TO PLACEMENT OF ROADWAY PAVEMENT FOUNDATION COURSE. FOUNDATION COURSE SHALL BE COMPACTED OVER WASHED STONE WEEPS.

TOWN OF VICTOR NEW YORK

ALL CONSTRUCTION TO CONFORM TO SPECIFICATIONS WRITTEN IN THE VICTOR D&C STANDARDS

CONCRETE GUTTER WITH STONE WEEP DETAIL

NOT TO SCALE

JANUARY 2014

RS-3

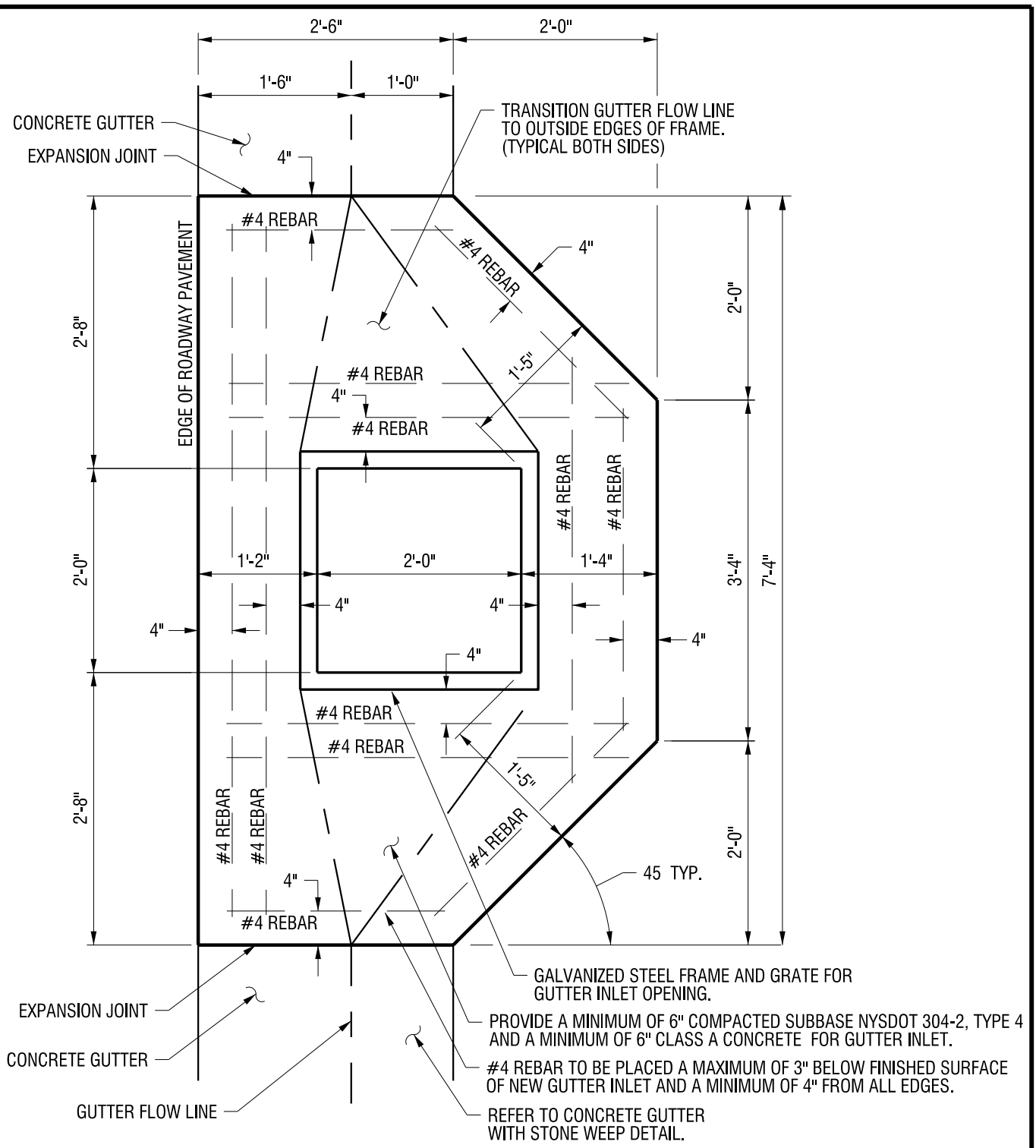

NOTES:

1. CONCRETE SHALL CONFORM TO NYSDOT 501, NYSDOT CLASS A CONCRETE FOR CONVENTIONAL FORMED CONCRETE GUTTERS.
2. IMMEDIATELY AFTER PLACEMENT OF CONCRETE, THOROUGHLY COMPACT CONCRETE WITH MECHANICAL VIBRATING EQUIPMENT.
3. NYSDOT 711-05 WHITE PIGMENTED MEMBRANE CURING COMPOUND SHALL BE APPLIED IMMEDIATELY AFTER FINISHING CONCRETE SURFACE IN ACCORDANCE WITH NYSDOT 502-3.11 AT A RATE OF 1.5 GALLONS PER 150 S.F. APPLY TO ALL EXPOSED SURFACES.

TOWN OF VICTOR NEW YORK

ALL CONSTRUCTION TO CONFORM TO SPECIFICATIONS WRITTEN IN THE VICTOR D&C STANDARDS

GUTTER INLET DETAIL

NOT TO SCALE

JANUARY 2014

RS-4

DATE/TIME: Thursday, February 06, 2014 AT 3:56 PM
FILENAME: J:\Victor, Town Of\208375 - General Consultation\208375.004 - Annual Update Design & Const\2014 Standrads\2014 Updates Victor D&C Standard Details\RS-4.Dgn

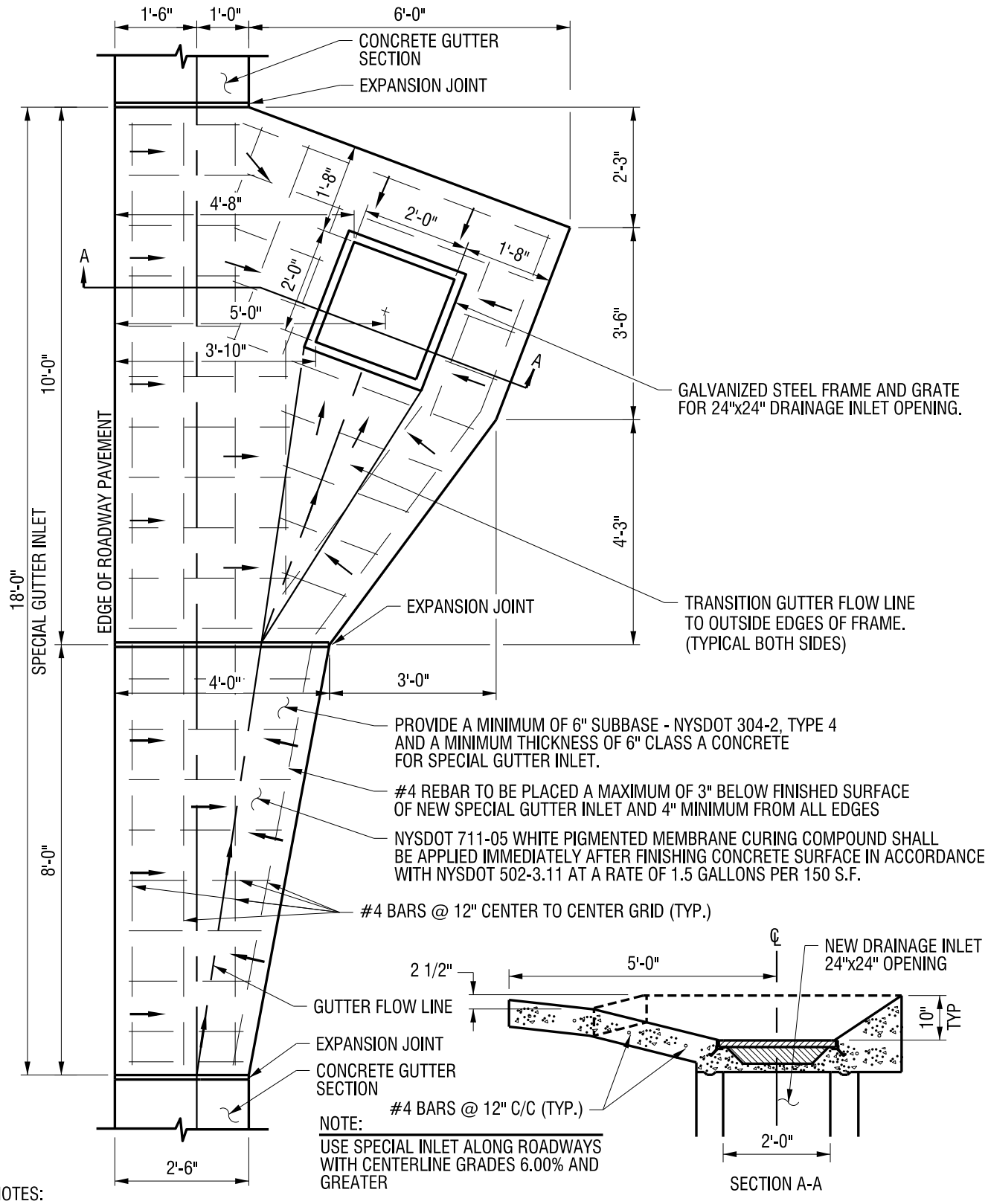

NOTES:

1. CONCRETE SHALL CONFORM TO NYSDOT 501, NYSDOT CLASS A CONCRETE FOR CONVENTIONAL FORMED CONCRETE GUTTERS.
2. IMMEDIATELY AFTER PLACEMENT OF CONCRETE, THOROUGHLY COMPACT CONCRETE WITH MECHANICAL VIBRATING EQUIPMENT.

TOWN OF VICTOR NEW YORK

ALL CONSTRUCTION TO CONFORM TO SPECIFICATIONS WRITTEN IN THE VICTOR D&C STANDARDS

SPECIAL GUTTER INLET DETAIL

NOT TO SCALE

JANUARY 2014

RS-5

DATE/TIME: Thursday, February 06, 2014 AT 6:58 AM
FILENAME: J:\Victor, Town Of\208375 - General Consultation\208375.004 - Annual Update Design & Const\2014 Standrads\2014 Updates Victor D&C Standard Details\RS-5.Dgn

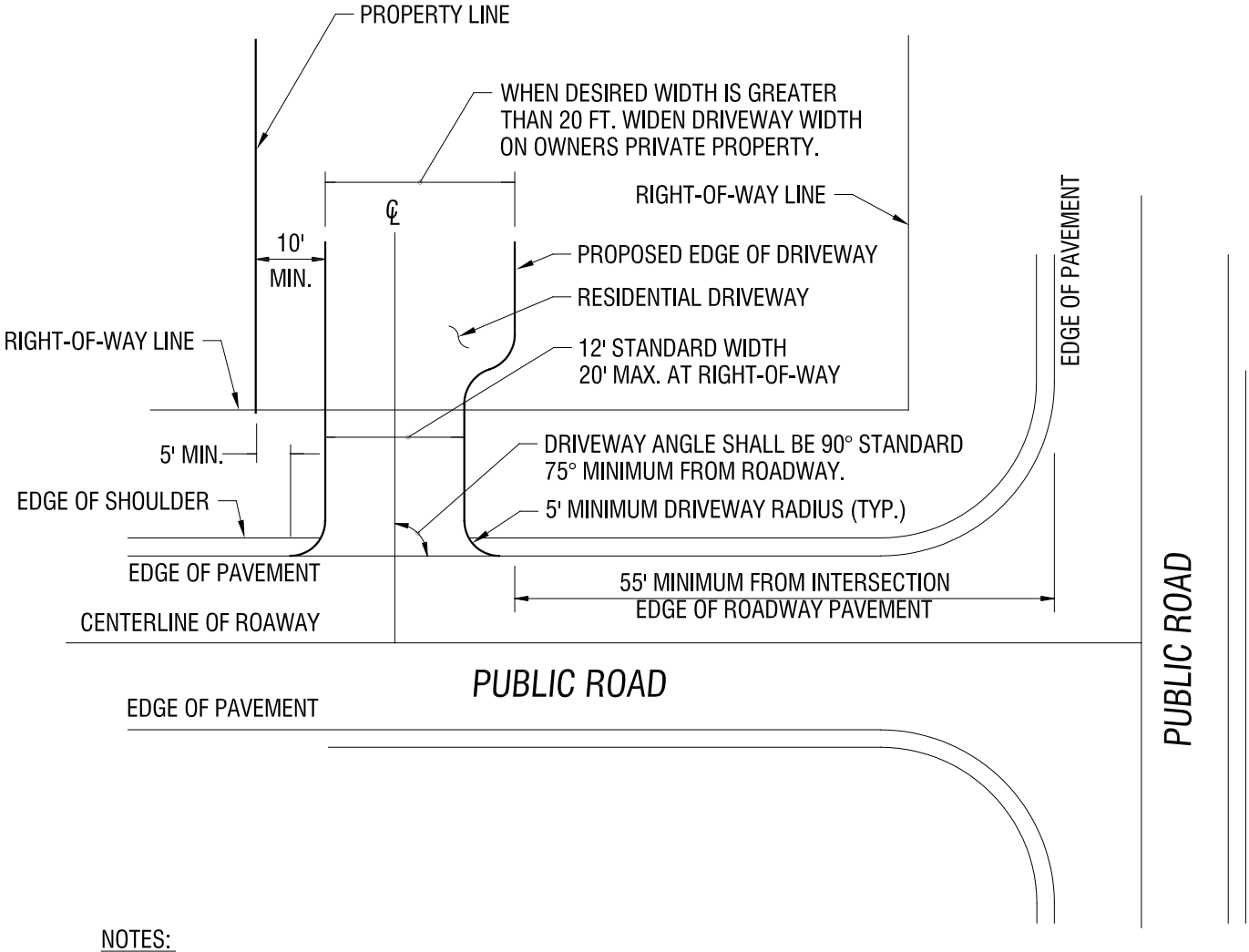

NOTES:

1) REFER TO TOWN OF VICTOR DESIGN AND CONSTRUCTION STANDARDS FOR LAND DEVELOPMENT - SECTION 2, 3 & 6 FOR DRIVEWAY SPECIFICATIONS.

2) FOR COMMERCIAL DRIVEWAY DESIGN, REFER TO THE NYSDOT POLICY & STANDARDS FOR THE DESIGN OF ENTRANCES TO STATE HIGHWAYS.

3) DRIVEWAY MAXIMUM GRADE SHALL NOT EXCEED 10%

4) 50 FT. MINIMUM HORIZONTAL CURVE ALONG CENTERLINE OF DRIVEWAY.

TOWN OF VICTOR NEW YORK

ALL CONSTRUCTION TO CONFORM TO SPECIFICATIONS WRITTEN IN THE VICTOR D&C STANDARDS

DRIVEWAY LAYOUT DETAIL

NOT TO SCALE

JANUARY 2018

RS-6

DATE/TIME: Friday, January 12, 2018 AT 9:00 AM
FILENAME: J:\Victor, Town Of\208375 - General Consultation\208375.004 - Annual Update Design & Const\2016 Standards\2018 Updates Victor D&C Standard Details\RS-6.dwg

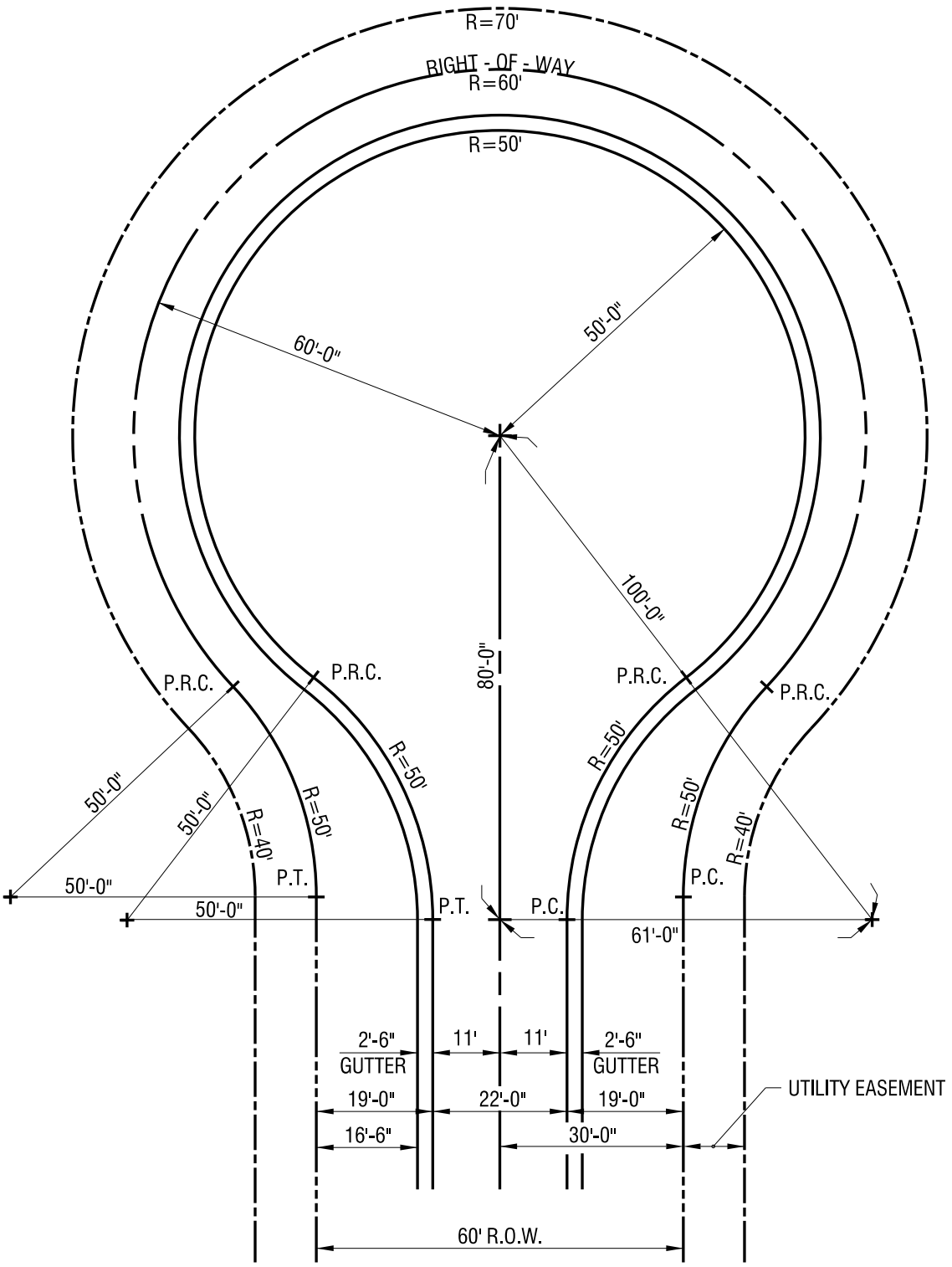

ALL CONSTRUCTION TO CONFORM TO SPECIFICATIONS WRITTEN IN THE VICTOR D&C STANDARDS

TOWN OF VICTOR NEW YORK

TYPICAL CUL-DE-SAC LAYOUT DETAIL

NOT TO SCALE

JANUARY 2014

RS-7

DATE/TIME: Thursday, February 06, 2014 AT 7:02 AM

FILENAME: J:\Victor, Town Of\208375 - General Consultation\208375.004 - Annual Update Design & Const\2014 Standrads\2014 Updates Victor D&C Standard Details\RS-7.Dgn

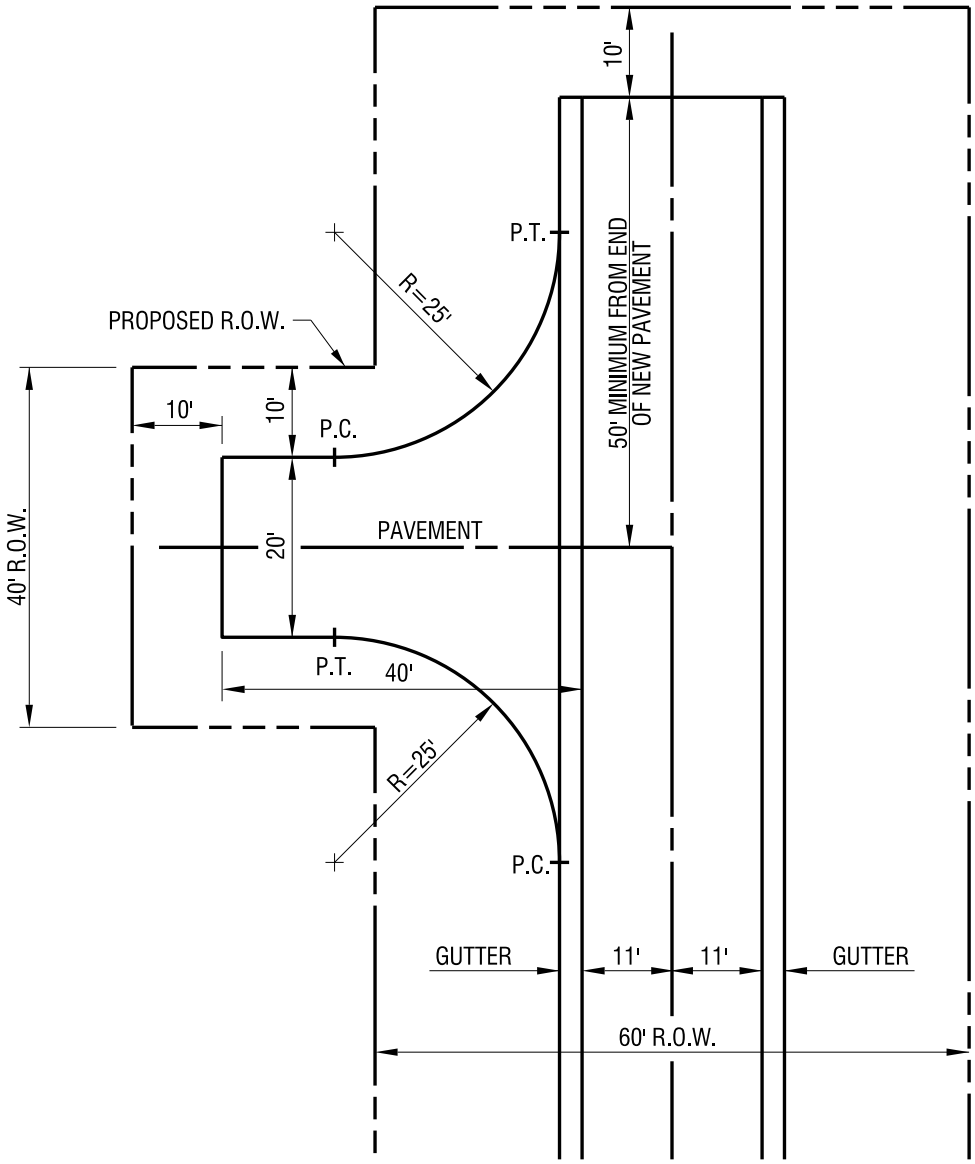

NOTE:
THE TURN-AROUND PAVEMENT SECTION SHALL BE:
12" COMPACTED THICKNESS SUBBASE COURSE NYSDOT 304-2 TYPE 4.
3" THICK ASPHALT BINDER COURSE NYSDOT TYPE 3 AND
1" THICK ASPHALT TOP COURSE NYSDOT TYPE 7.

ALL CONSTRUCTION TO CONFORM TO SPECIFICATIONS WRITTEN IN THE VICTOR D&C STANDARDS

TOWN OF VICTOR NEW YORK

TYPICAL ROADWAY TURN-AROUND DETAIL

NOT TO SCALE

JANUARY 2014

RS-8

DATE/TIME: Thursday, February 06, 2014 AT 7:04 AM
FILENAME: J:\Victor, Town Of\208375 - General Consultation\208375.004 - Annual Update Design & Const\2014 Standrads\2014 Updates Victor D&C Standard Details\RS-8.Dgn

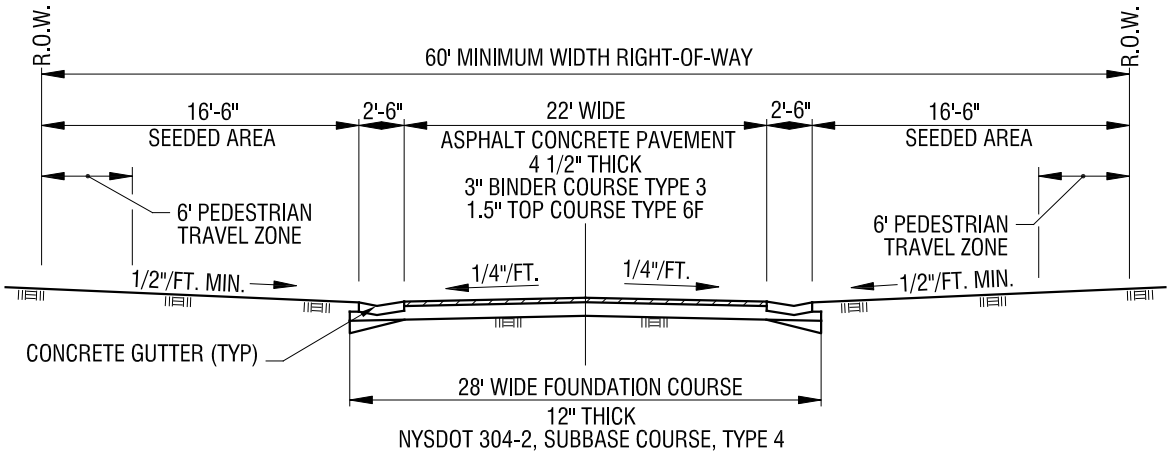

LOCAL STREET (UP TO 1,000 ADT)

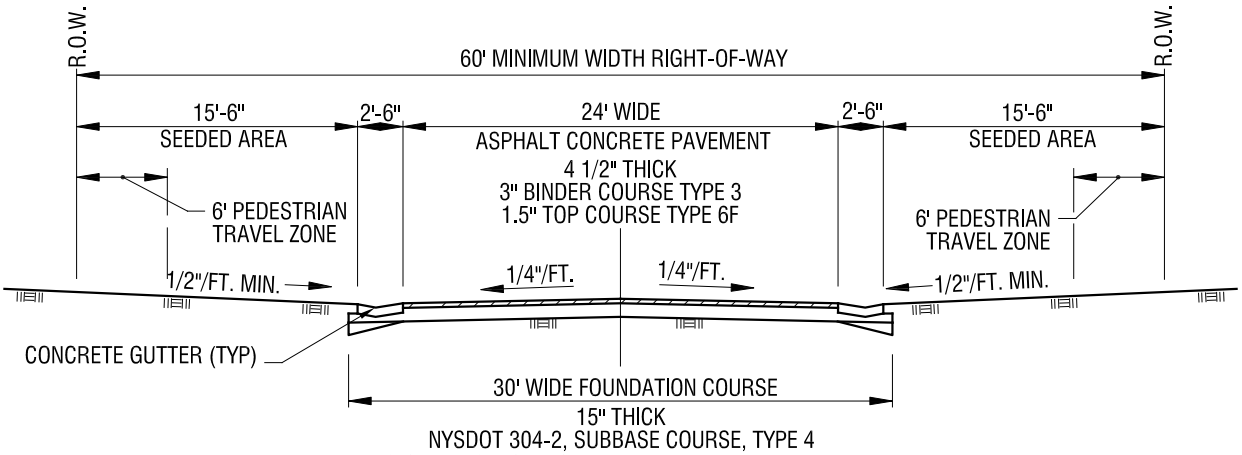

COLLECTOR STREET (UP TO 3,000 ADT)

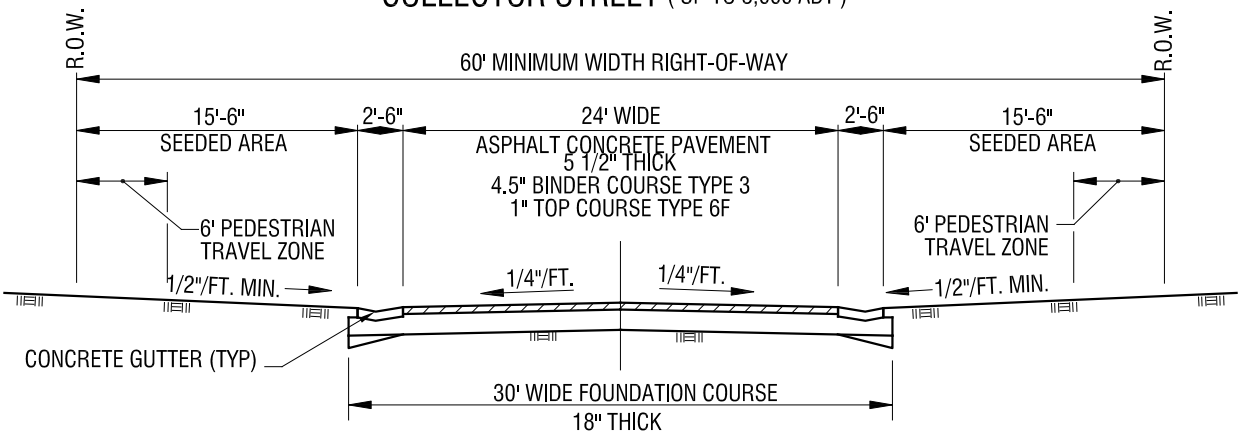

PRIMARY OR MAJOR ROAD (GREATER THAN 3,000 ADT)
(INCLUDING ALL STREETS SERVING COMMERCIAL AND INDUSTRIAL SUBDIVISIONS)

TOWN OF VICTOR NEW YORK

ALL CONSTRUCTION TO CONFORM TO SPECIFICATIONS WRITTEN IN THE VICTOR D&C STANDARDS

TYPICAL ROADWAY SECTIONS - ALTERNATE A

NOT TO SCALE

JANUARY 2018

RS-9

DATE/TIME: Thursday, January 11, 2018 AT 9:36 AM
FILENAME: J:\Victor, Town Of\208375 - General Consultation\208375.004 - Annual Update Design & Const\2016 Standards\2018 Updates Victor D&C Standard Details\RS-9.dwg

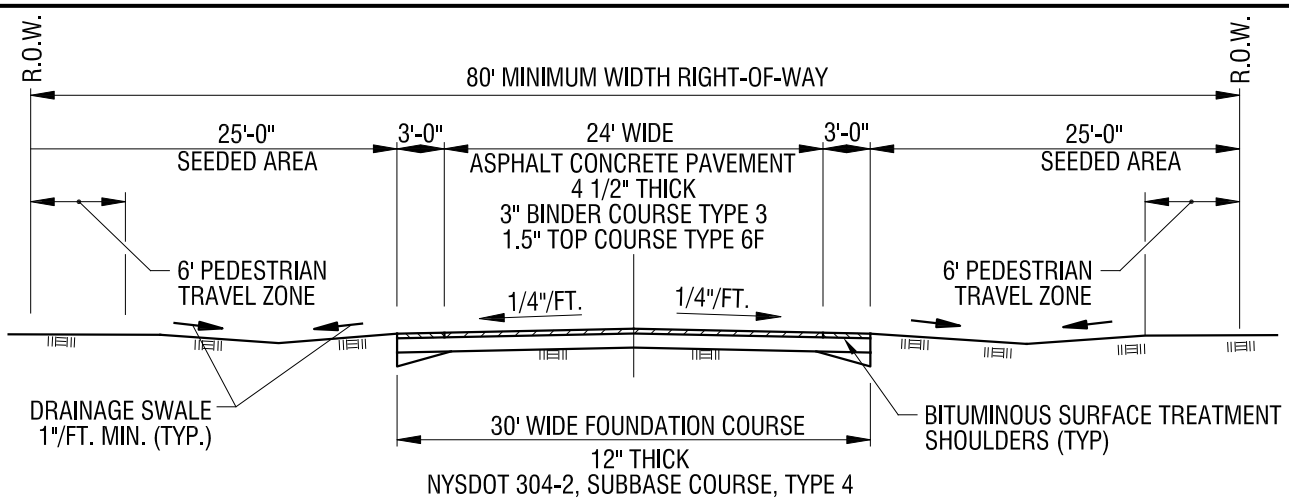

LOCAL STREET (UP TO 1,000 ADT)

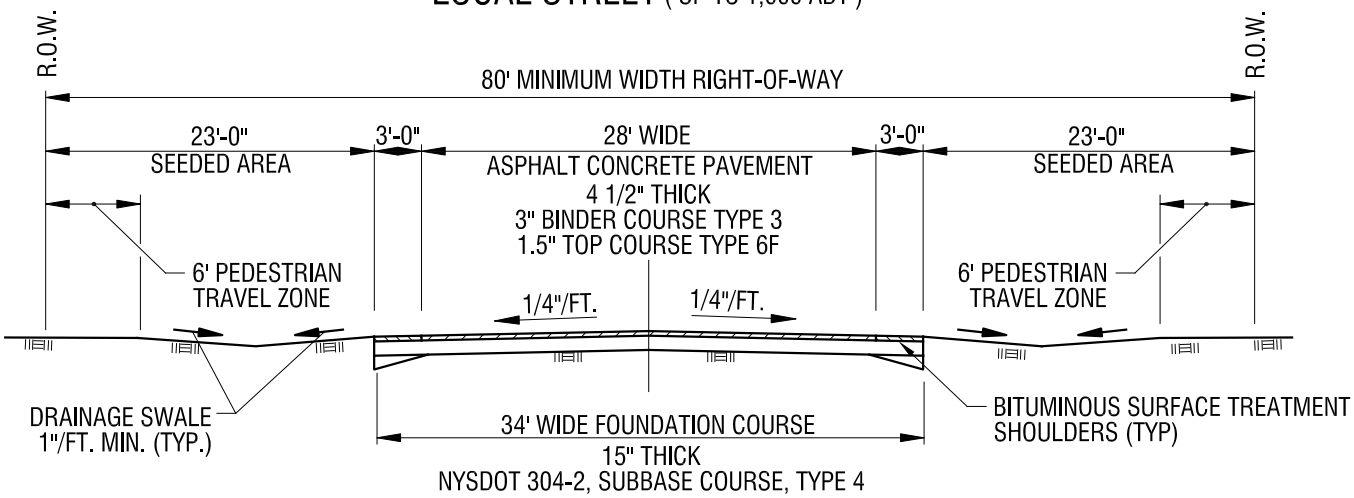

COLLECTOR STREET (UP TO 3,000 ADT)

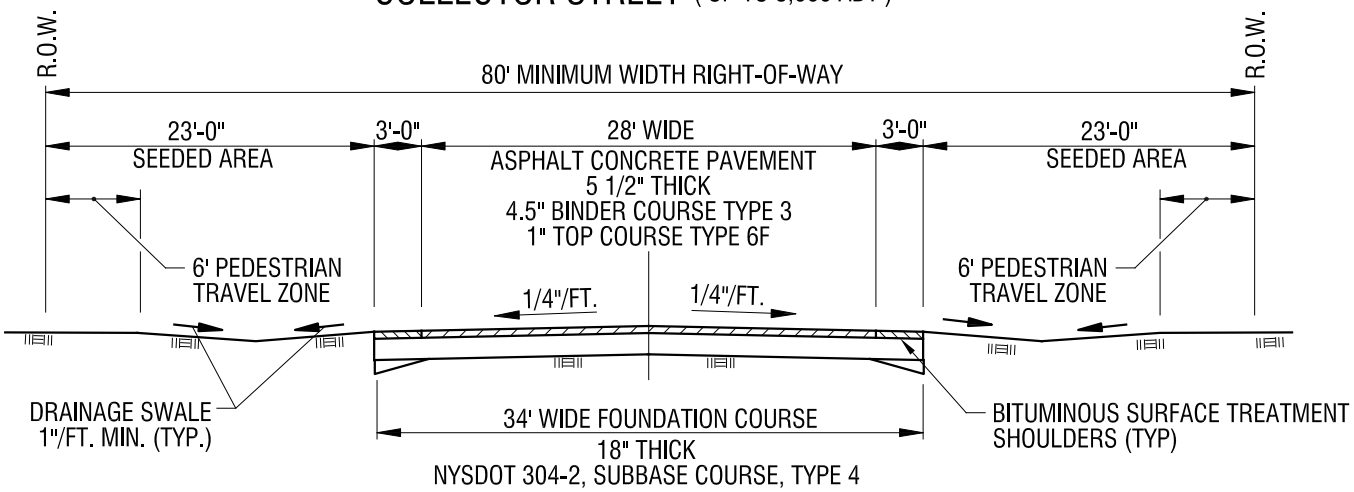

PRIMARY OR MAJOR ROAD (GREATER THAN 3,000 ADT)

(INCLUDING ALL STREETS SERVING COMMERCIAL AND INDUSTRIAL SUBDIVISIONS)

NOTE: ALTERNATE B SHALL NOT BE USED IN RESIDENTIAL SUBDIVISIONS

TOWN OF VICTOR NEW YORK

ALL CONSTRUCTION TO CONFORM TO SPECIFICATIONS WRITTEN IN THE VICTOR D&C STANDARDS

TYPICAL ROADWAY SECTIONS - ALTERNATE B

NOT TO SCALE

JANUARY 2018

RS-10

DATE/TIME: Thursday, January 11, 2018 AT 9:36 AM
FILENAME: J:\Victor, Town Of\208375 - General Consultation\208375.004 - Annual Update Design & Const\2016 Standards\2018 Updates Victor D&C Standard Details\RS-10.dwg

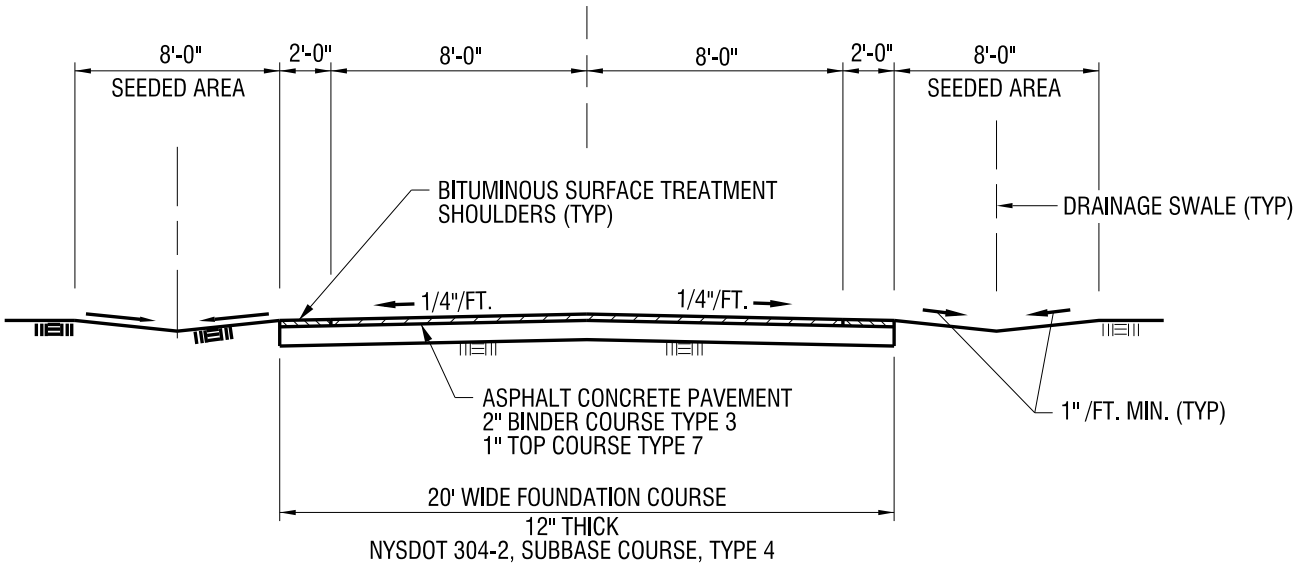

COMMON DRIVEWAYS SHALL NOT SERVE
MORE THAN THREE PROPERTIES.

TYPICAL SECTION - COMMON DRIVEWAY

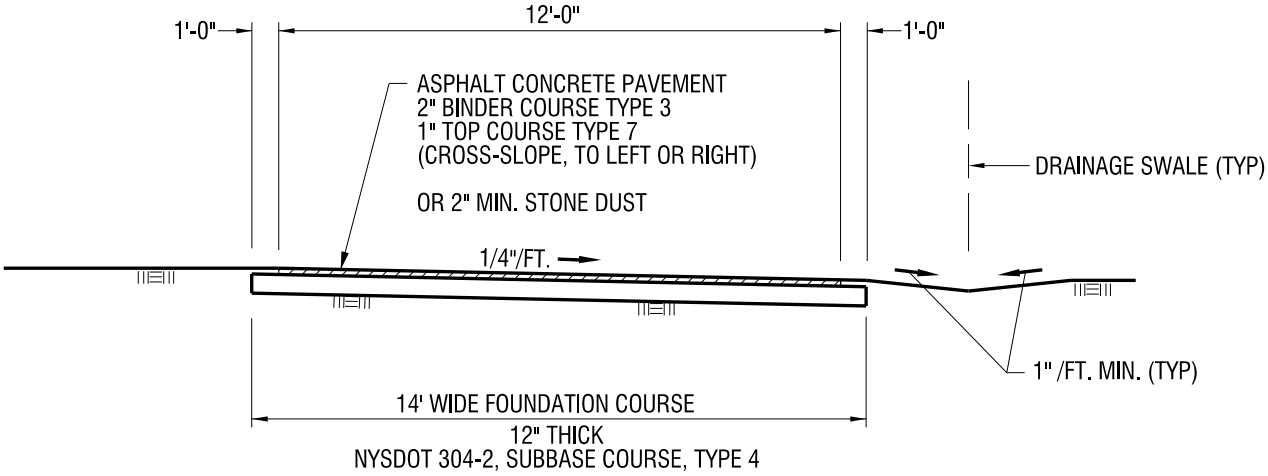

TYPICAL SECTION - INDIVIDUAL DRIVEWAY

NOTES:

1) REFER TO TOWN OF VICTOR DESIGN AND CONSTRUCTION STANDARDS FOR LAND DEVELOPMENT - SECTION 2, 3 & 6 FOR DRIVEWAY SPECIFICATIONS.

2) FOR COMMERCIAL DRIVEWAY DESIGN, REFER TO THE NYSDOT POLICY & STANDARDS FOR THE DESIGN OF ENTRANCES TO STATE HIGHWAYS.

3) DRIVEWAY MAXIMUM GRADE SHALL NOT EXCEED 10%

4) 50 FT. MINIMUM HORIZONTAL CURVE ALONG CENTERLINE OF DRIVEWAY.

TOWN OF VICTOR NEW YORK

ALL CONSTRUCTION TO CONFORM TO SPECIFICATIONS WRITTEN IN THE VICTOR D&C STANDARDS

TYPICAL DRIVEWAY SECTIONS	NOT TO SCALE
	JANUARY 2014
	RS-11

DATE/TIME: Thursday, February 06, 2014 AT 7:07 AM
FILENAME: J:\Victor, Town Of\208375 - General Consultation\208375.004 - Annual Update Design & Const\2014 Standrads\2014 Updates Victor D&C Standard Details\RS-11.Dgn

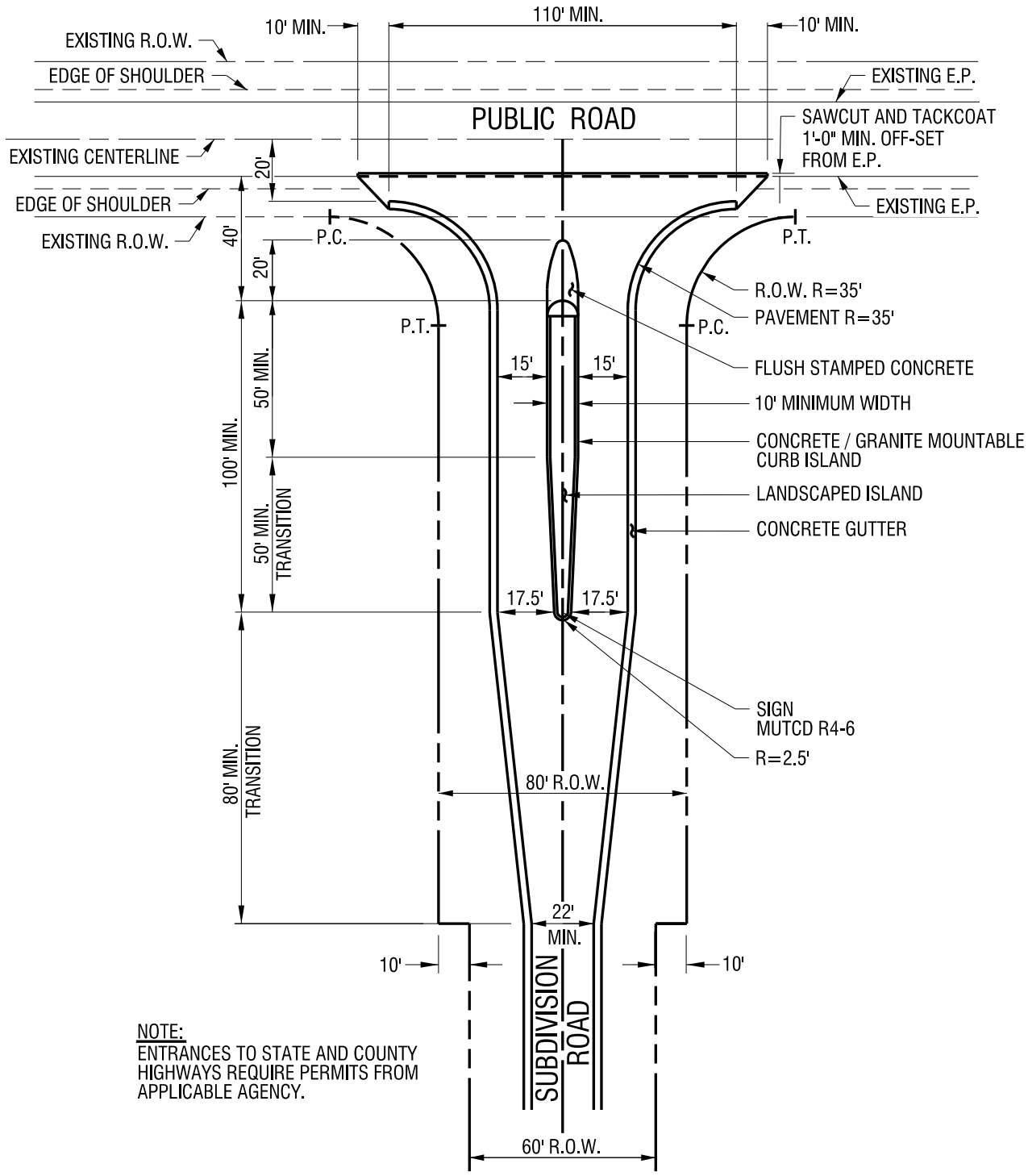

NOTE:
ENTRANCES TO STATE AND COUNTY HIGHWAYS REQUIRE PERMITS FROM APPLICABLE AGENCY.

TOWN OF VICTOR NEW YORK

ALL CONSTRUCTION TO CONFORM TO SPECIFICATIONS WRITTEN IN THE VICTOR D&C STANDARDS

TYPICAL MAJOR COMMERCIAL & INDUSTRIAL SUBDIVISION ROAD ENTRANCE

NOT TO SCALE

JANUARY 2014

RS-12

DATE/TIME: Thursday, February 06, 2014 AT 7:07 AM
FILENAME: J:\Victor, Town Of\208375 - General Consultation\208375.004 - Annual Update Design & Const\2014 Standrads\2014 Updates Victor D&C Standard Details\RS-12.Dgn

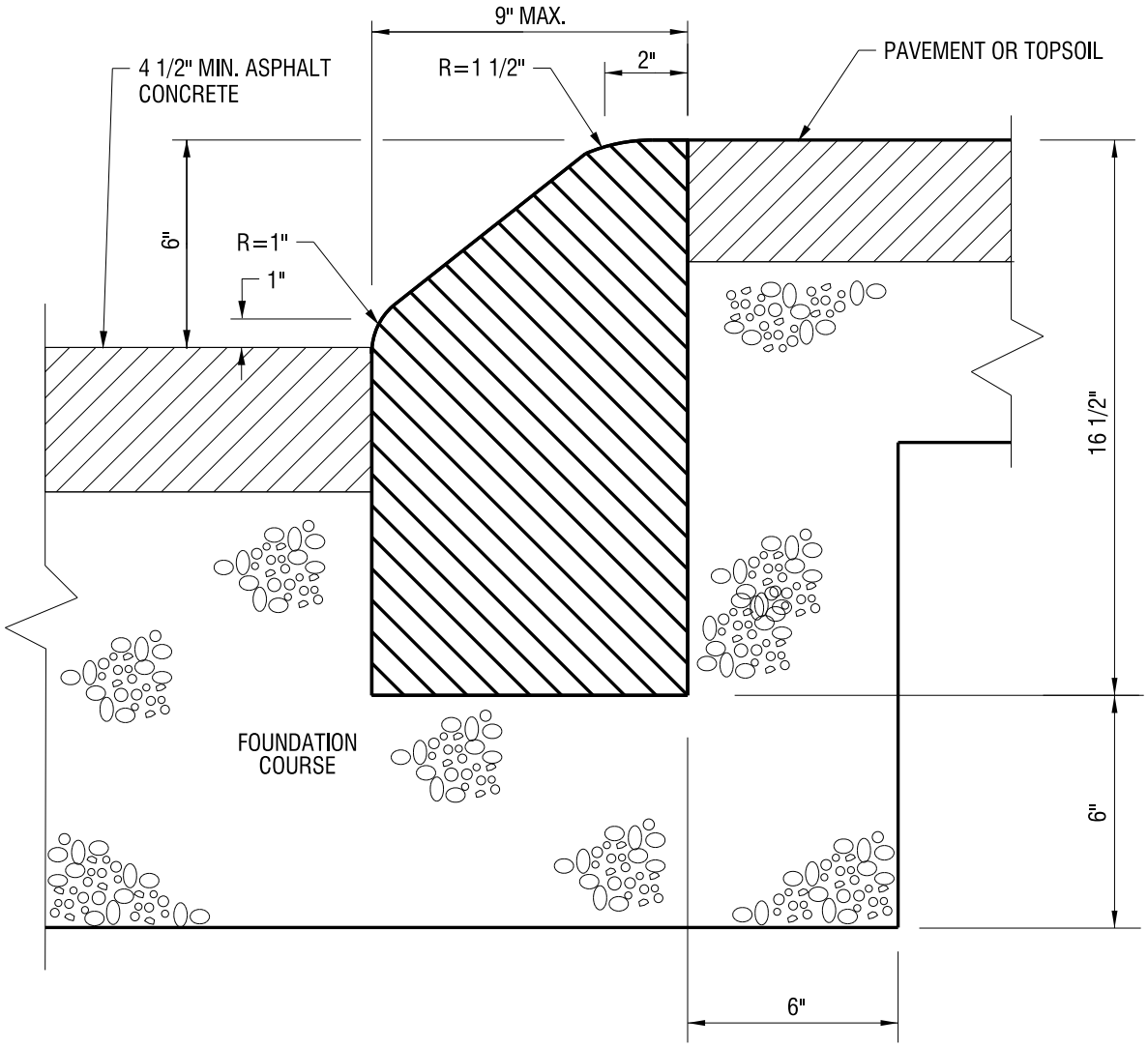

CONCRETE AND GRANITE
MOUNTABLE CURB

ALL CONSTRUCTION TO CONFORM TO SPECIFICATIONS WRITTEN IN THE VICTOR D&C STANDARDS

TOWN OF VICTOR NEW YORK

MOUNTABLE CURB DETAIL

NOT TO SCALE

JANUARY 2014

RS-13

DATE/TIME: Thursday, February 06, 2014 AT 7:07 AM
FILENAME: J:\Victor, Town Of\208375 - General Consultation\208375.004 - Annual Update Design & Const\2014 Standrads\2014 Updates Victor D&C Standard Details\RS-13.Dgn

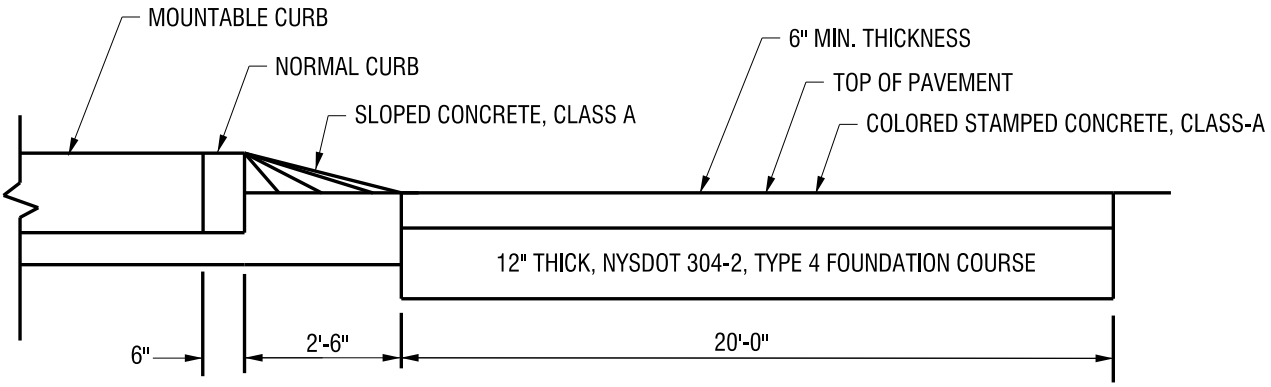

SECTION

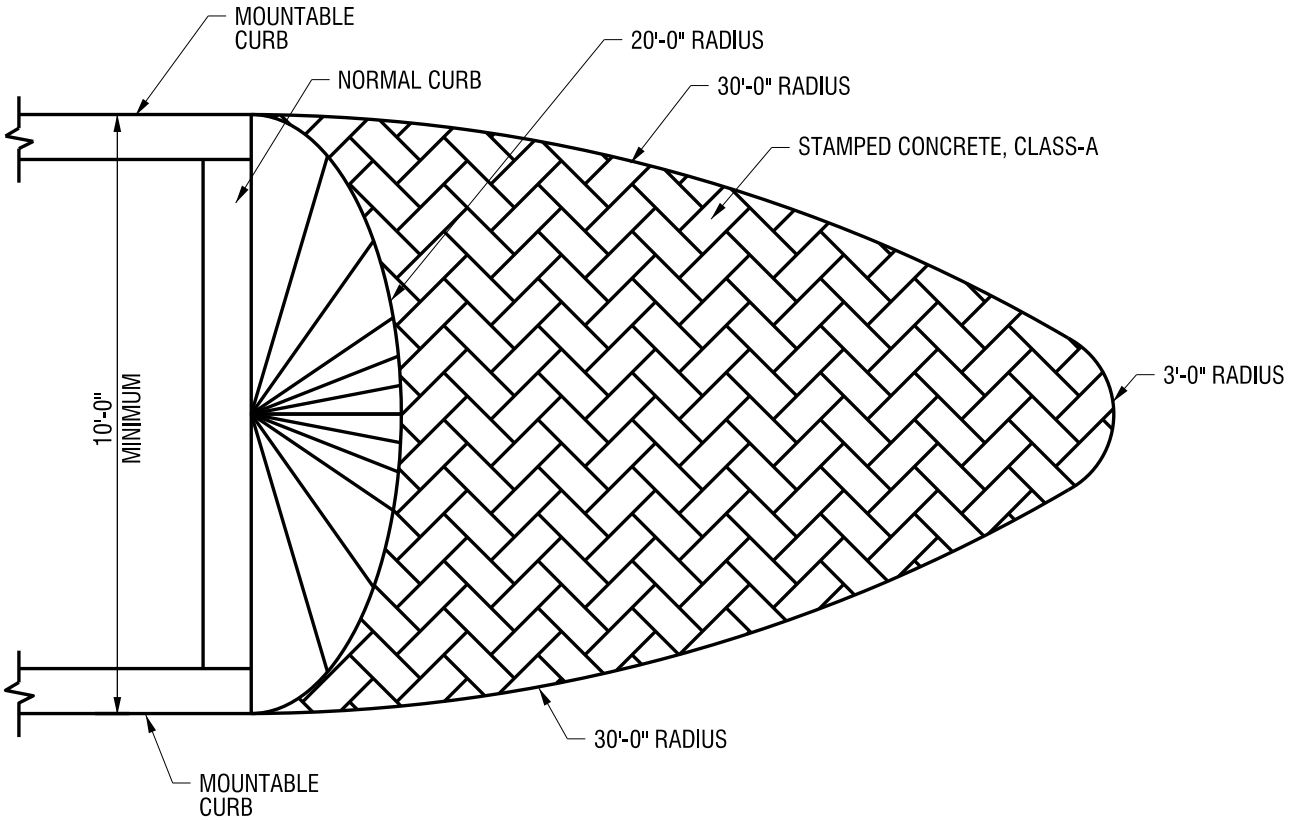

PLAN

ALL CONSTRUCTION TO CONFORM TO SPECIFICATIONS WRITTEN IN THE VICTOR D&C STANDARDS

TOWN OF VICTOR NEW YORK

COMMERCIAL & INDUSTRIAL SUBDIVISION ROAD ENTRANCE ISLAND NOSE DETAIL

NOT TO SCALE

JANUARY 2014

RS-14

DATE/TIME: Thursday, February 06, 2014 AT 7:08 AM
FILENAME: J:\Victor, Town Of\208375 - General Consultation\208375.004 - Annual Update Design & Const\2014 Standrads\2014 Updates Victor D&C Standard Details\RS-14.Dgn

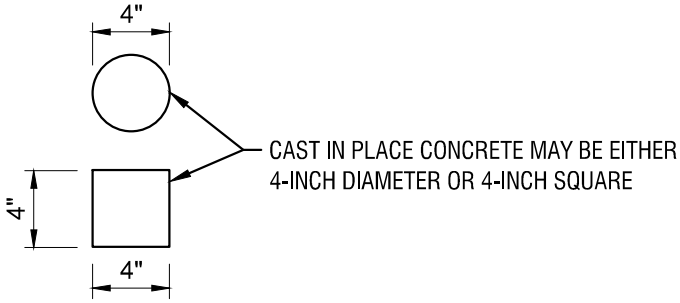

PLAN

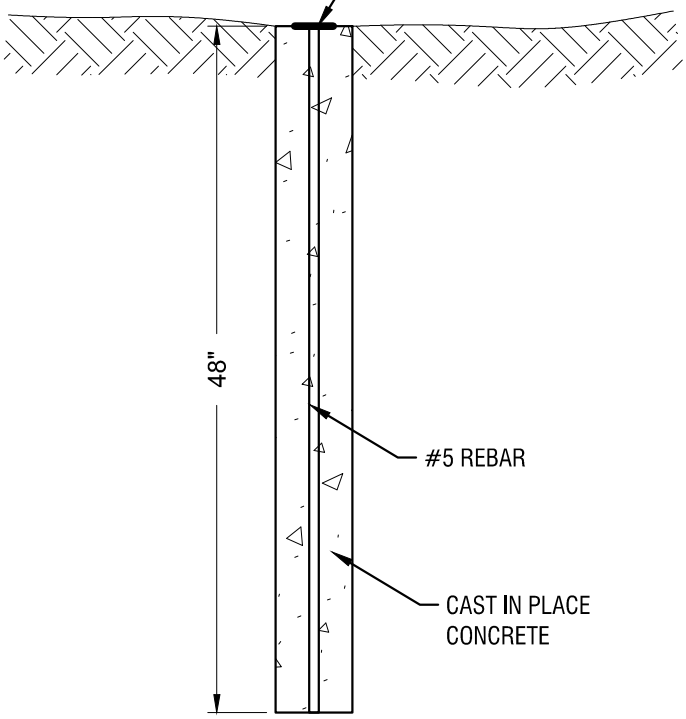

SECTION

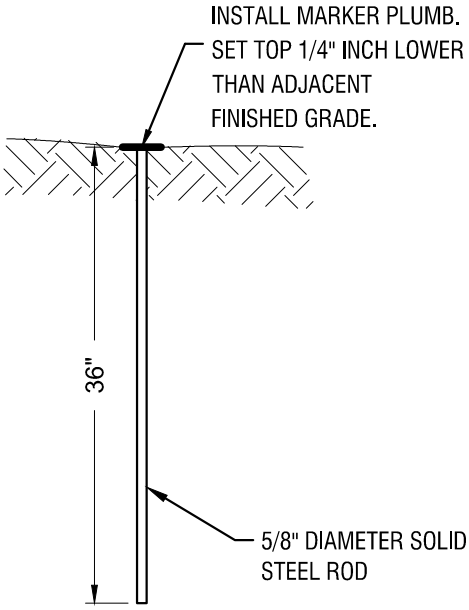

SECTION

NOTE:

1. THE REBAR/CAP SHALL MARK THE EXACT POINT DENOTED ON THE PLAN

MONUMENT MARKER

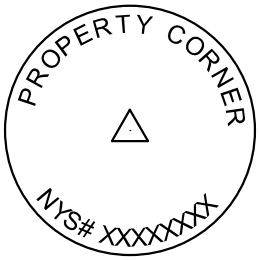

PROPERTY CORNER MARKER

town of VICTOR NEW YORK

ALL CONSTRUCTION TO CONFORM TO SPECIFICATIONS WRITTEN IN THE VICTOR D&C STANDARDS

MONUMENT & PROPERTY CORNER MARKER DETAIL

NOT TO SCALE

DECEMBER 2021

RS-15

DATE/TIME: Monday, November 15, 2021 AT 9:04 AM
FILENAME: \\CASH.lab\P\V\Victor, Town Of\208375 - General Consultation\208375.004 - Annual Update Design & Const\2021 Standards - Working Folder\02 Detail Updates\AutoCad\2021 RS-15.dwg

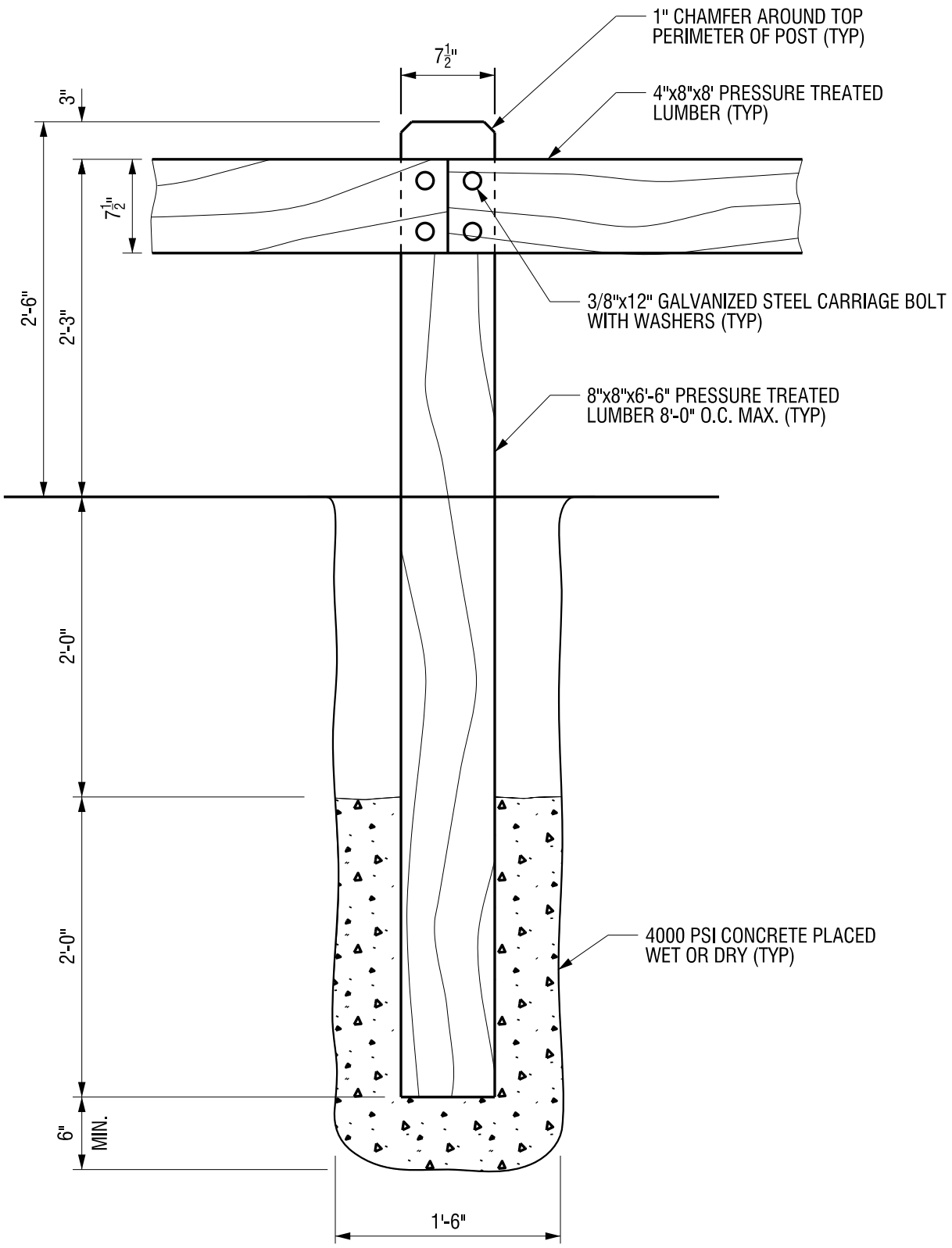

ALL CONSTRUCTION TO CONFORM TO SPECIFICATIONS WRITTEN IN THE VICTOR D&C STANDARDS

TOWN OF VICTOR NEW YORK

DECORATIVE TIMBER GUIDE RAIL DETAIL

NOT TO SCALE

JANUARY 2014

RS-16

DATE/TIME: Thursday, February 06, 2014 AT 7:09 AM
FILENAME: J:\Victor, Town Of\208375 - General Consultation\208375.004 - Annual Update Design & Const\2014 Standrads\2014 Updates Victor D&C Standard Details\RS-16.Dgn

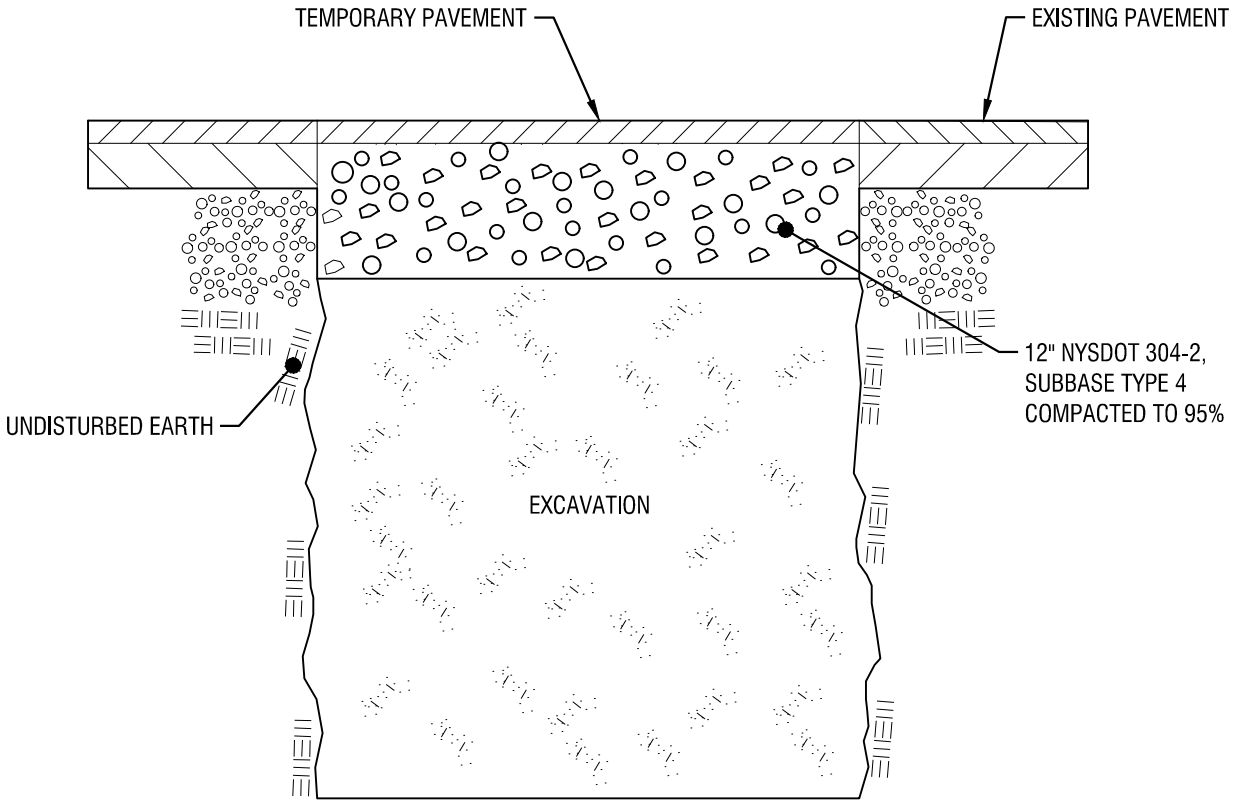

NOTES:

1. TEMPORARY PAVEMENT MATERIAL IS TO BE 2 INCHES TYPE 19 F9 BINDER COURSE HMA / WMA 80 SERIES COMPACTION, RECYCLED ASPHALT OR ASHALT MILLINGS. ASPHALT COLD PATCH ARE NOT ACCEPTABLE FOR USE AS TEMPORARY PAVEMENT.

2. DURING WINTER SEASON (NOVEMBER 1 THRU APRIL 14), IF HMA / WMA MATERIAL IS NOT AVAILABLE, USE NYSDOT CLASS F OR HES CONCRETE FOR TEMPORARY PAVEMENT. CONCRETE IS TO BE MINIMUM 4 INCHES THICK FOR PRIMARY ROADS, 3 INCHES THICK FOR LOCAL STREETS AND ALLEYS, AND IS TO BE BROOM FINISHED.

3. TEMPORARY PAVEMENT IS TO BE PLACED AS SOON AS BACKFILLING OPERATIONS HAVE BEEN COMPLETED, AND AS REQUIRED BY THE OWNERS REPRESENTATIVE AND WITHIN 24 HOURS AFTER HAVING RECEIVED NOTICED.

4. TEMPORARY PAVEMENT MATERIAL IS TO BE COMPACTED TO PROVIDE FIRM, SMOOTH, SLIP RESISTANT, WELL DRAINED, AND FULL ACCESSIBLE FOR PERSONS WITH DISABILITIES.

town of VICTOR NEW YORK

ALL CONSTRUCTION TO CONFORM TO SPECIFICATIONS WRITTEN IN THE VICTOR D&C STANDARDS

TEMPORARY PAVEMENT

NOT TO SCALE

MARCH 2022

RS-17

DATE/TIME: Thursday, March 17, 2022 AT 3:15 PM
FILENAME: \\CASH.lab\P\V\Victor, Town Of\208375 - General Consultation\208375.004 - Annual Update Design & Const\2021 Standards - Working Folder\02 Detail Updates\AutoCad\2022 RS-17.dwg

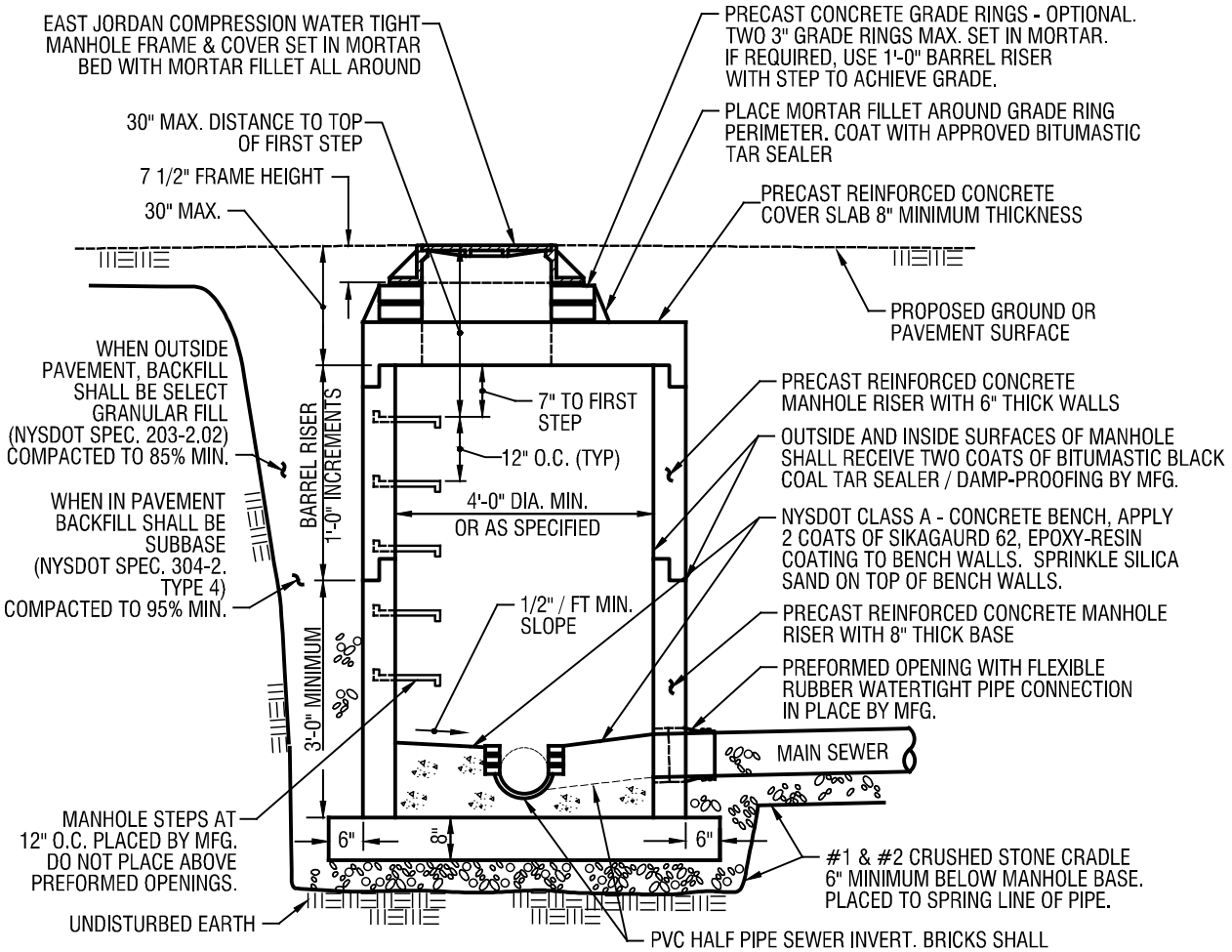

NOTE:
IN HIGHLY CORROSIVE CONDITIONS / AREAS, TOWN ENGINEER MAY REQUIRE 2 COATS OF SIKAGAURD 62, EPOXY-RESIN COATING. COATINGS TO BE APPLIED TO MANHOLE WALLS AND TOP SLAB.

SECTION

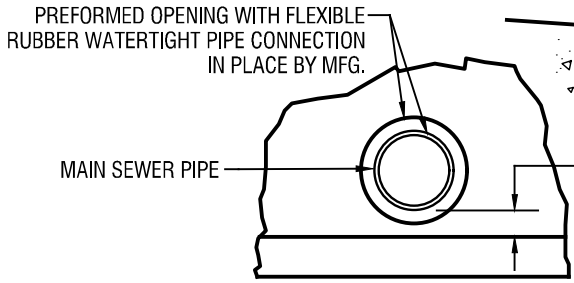

PREFORMED OPENING SECTION

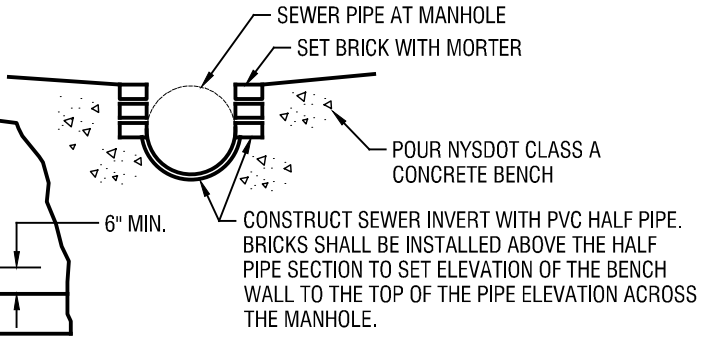

INVERT SECTION

town of VICTOR NEW YORK

ALL CONSTRUCTION TO CONFORM TO SPECIFICATIONS WRITTEN IN THE VICTOR D&C STANDARDS

PRECAST CONCRETE SANITARY MANHOLE DETAIL

NOT TO SCALE

DECEMBER 2021

SA-1

DATE/TIME: Monday, November 08, 2021 AT 8:17 AM
FILENAME: \\Projects6\v\Victor, Town Of\208375 - General Consultation\208375.004 - Annual Update Design & Const\2021 Standards - Working Folder\02 Detail Updates\AutoCad\2021 SA-1.dwg

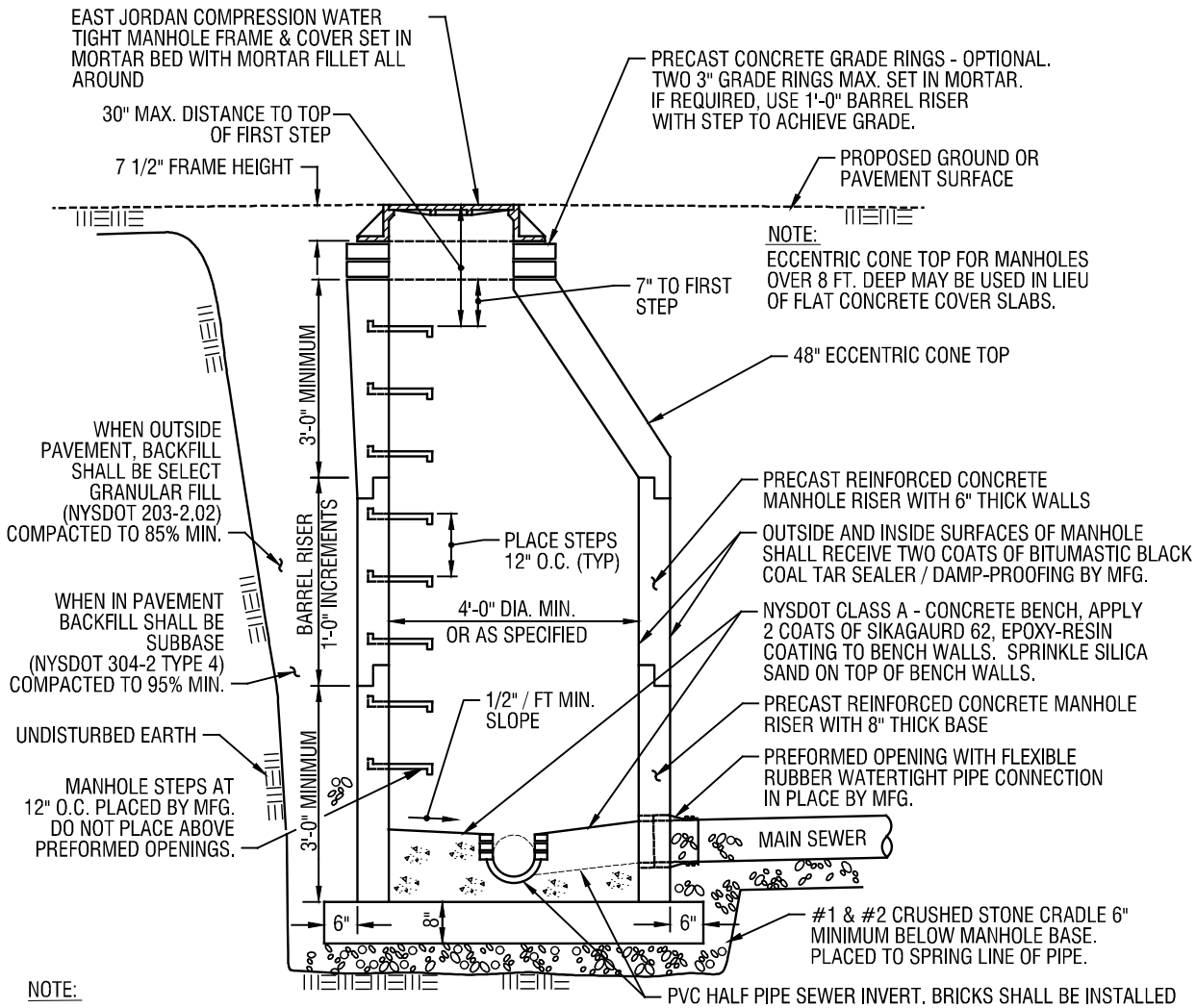

NOTE:
IN HIGHLY CORROSIVE CONDITIONS / AREAS, TOWN ENGINEER MAY REQUIRE 2 COATS OF SIKAGAURD 62, EPOXY-RESIN COATING. COATINGS TO BE APPLIED TO MANHOLE WALLS AND TOP SLAB.

SECTION

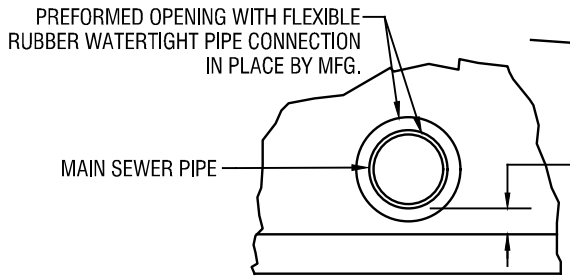

PREFORMED OPENING SECTION

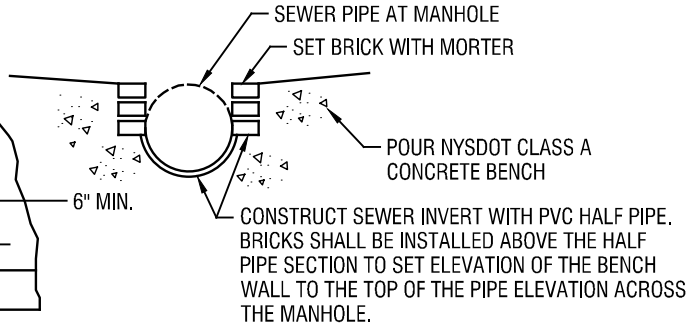

INVERT SECTION

town of VICTOR NEW YORK

ALL CONSTRUCTION TO CONFORM TO SPECIFICATIONS WRITTEN IN THE VICTOR D&C STANDARDS

PRECAST CONCRETE SANITARY MANHOLE WITH ECCENTRIC TOP DETAIL

NOT TO SCALE

DECEMBER 2021

SA-2

DATE/TIME: Monday, November 08, 2021 AT 8:24 AM
FILENAME: \\Projects6\v\Victor, Town Of\208375 - General Consultation\208375.004 - Annual Update Design & Const\2021 Standards - Working Folder\02 Detail Updates\AutoCad\2021 SA-2.dwg

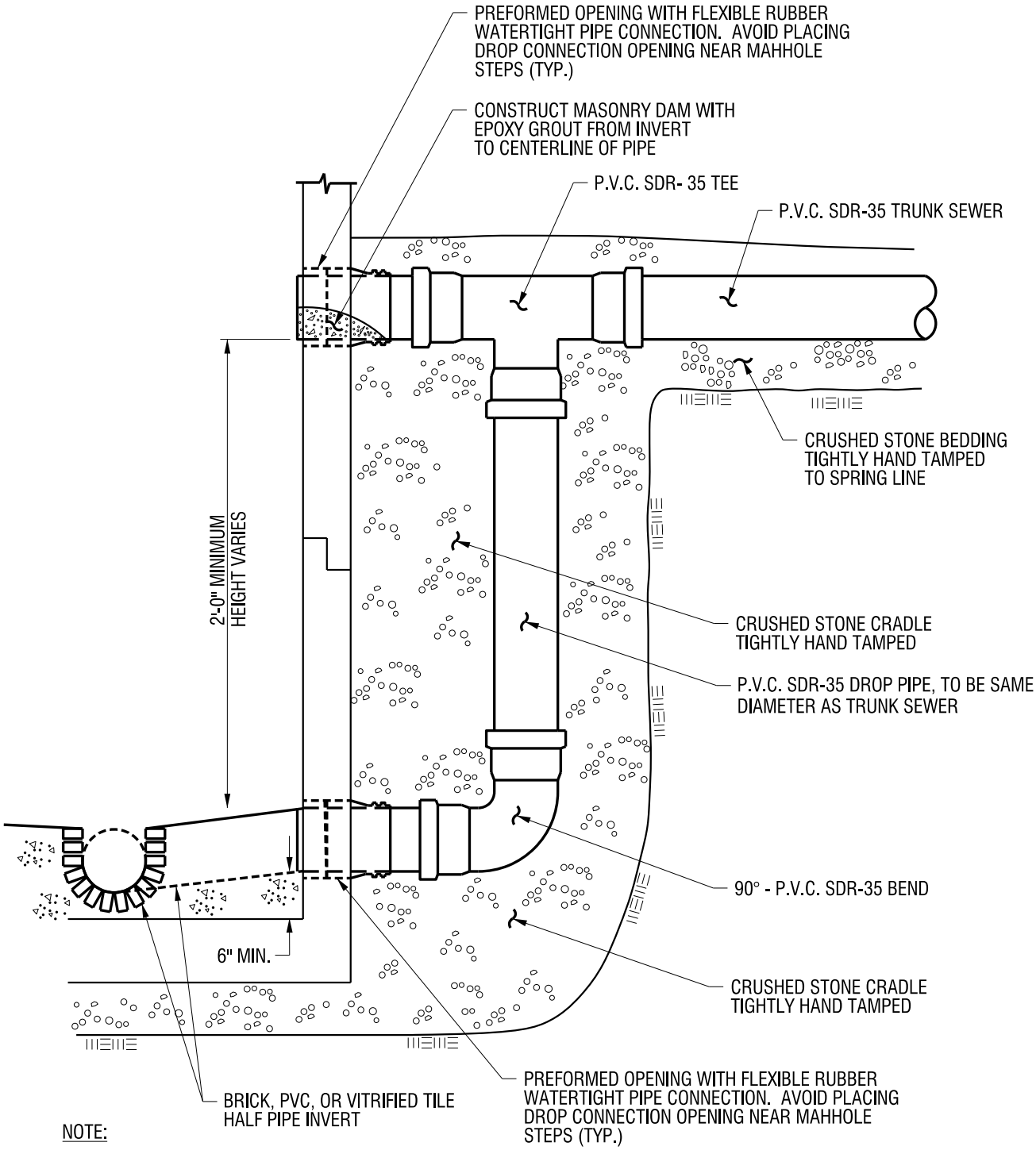

NOTE:

1) GLUED JOINTS WILL NOT BE PERMITTED.

2) ALL SEWER PIPES AND FITTINGS SHALL BE PUSH ON TYPE.

3) REFER TO SANITARY SEWER MAHOLE DETAILS FOR MANHOLE INSTALLATION DETAILS

TOWN OF VICTOR NEW YORK

ALL CONSTRUCTION TO CONFORM TO SPECIFICATIONS WRITTEN IN THE VICTOR D&C STANDARDS

SANITARY SEWER OUTSIDE DROP CONNECTION DETAIL

NOT TO SCALE

JANUARY 2014

SA-3

DATE/TIME: Thursday, February 06, 2014 AT 7:10 AM
FILENAME: J:\Victor, Town Of\208375 - General Consultation\208375.004 - Annual Update Design & Const\2014 Standrads\2014 Updates Victor D&C Standard Details\SA-3.Dgn

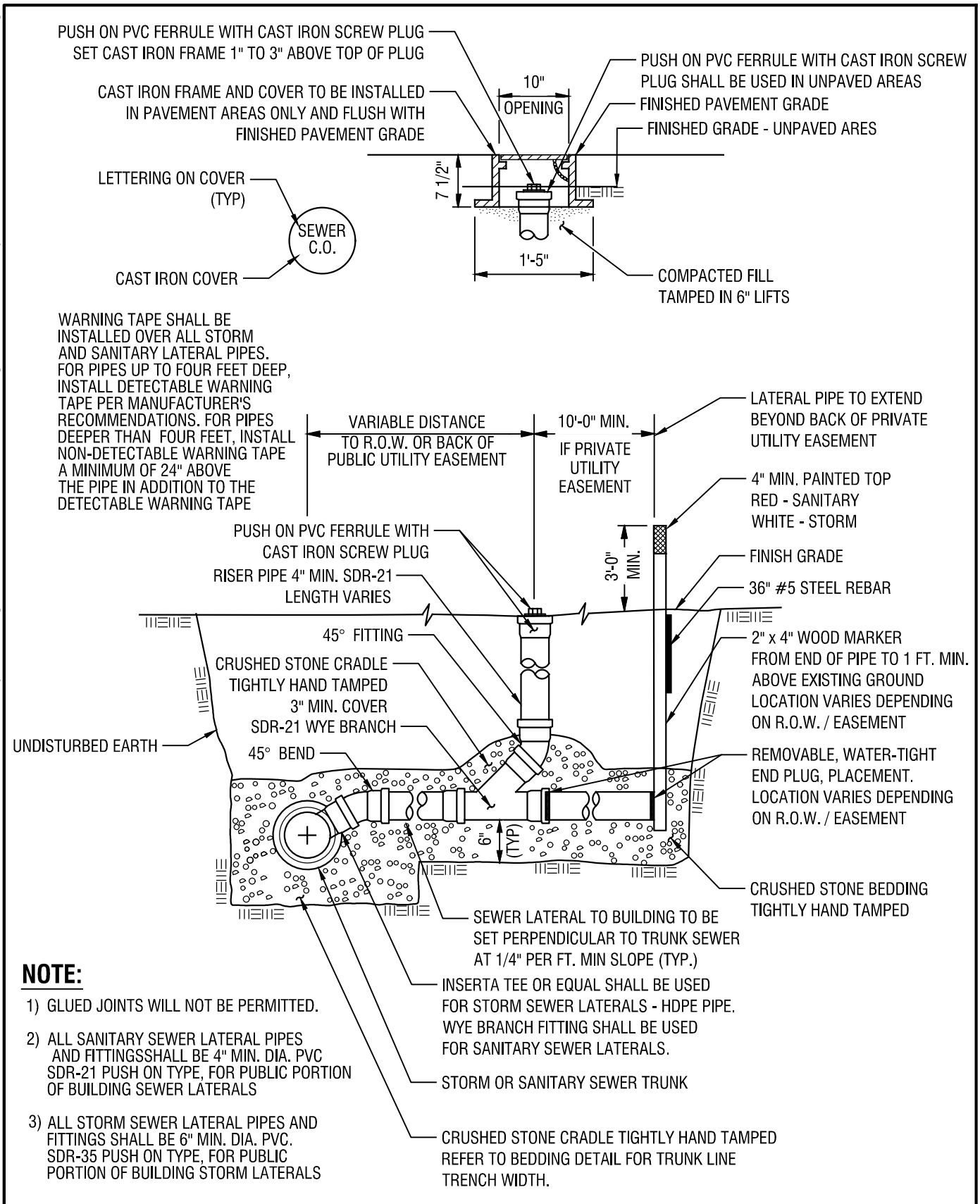

NOTE:

1) GLUED JOINTS WILL NOT BE PERMITTED.

2) ALL SANITARY SEWER LATERAL PIPES AND FITTINGSSHALL BE 4" MIN. DIA. PVC SDR-21 PUSH ON TYPE, FOR PUBLIC PORTION OF BUILDING SEWER LATERALS

3) ALL STORM SEWER LATERAL PIPES AND FITTINGS SHALL BE 6" MIN. DIA. PVC. SDR-35 PUSH ON TYPE, FOR PUBLIC PORTION OF BUILDING STORM LATERALS

town of VICTOR NEW YORK

ALL CONSTRUCTION TO CONFORM TO SPECIFICATIONS WRITTEN IN THE VICTOR D&C STANDARDS

SANITARY & STORM SEWER LATERAL DETAIL

NOT TO SCALE

DECEMBER 2021

SA / ST-4

DATE/TIME: Monday, November 15, 2021 AT 9:16 AM
FILENAME: \\CASH.lab\P\V\Victor, Town Of\208375 - General Consultation\208375.004 - Annual Update Design & Const\2021 Standards - Working Folder\02 Detail Updates\AutoCad\2021 SA-ST-4.dwg

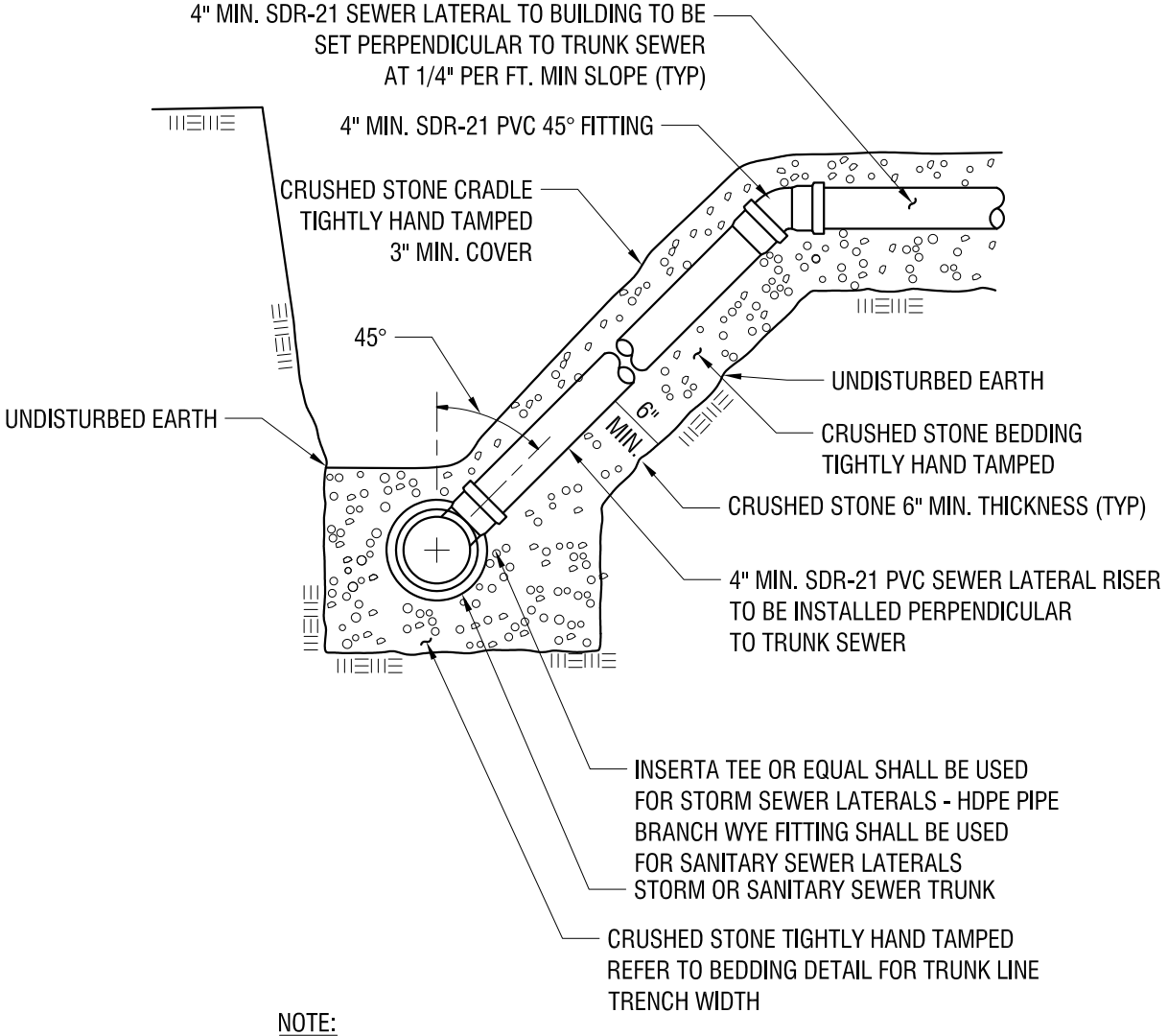

NOTE:

1) GLUED JOINTS WILL NOT BE PERMITTED.

2) ALL SEWER LATERAL PIPES AND FITTINGS SHALL BE 4" DIA. MIN. SDR-21 PVC. PUSH ON TYPE, FOR PUBLIC PORTION OF BUILDING SEWER LATERALS

3) UNDERGROUND WARNING TAPE SHALL BE INSTALLED OVER ALL STORM AND SANITARY LATERAL PIPES. FOR PIPES UP TO FOUR FEET DEEP, INSTALL DETECTABLE WARNING TAPE PER MANUFACTURER'S RECOMMENDATIONS. FOR PIPES DEEPER THAN FOUR FEET, INSTALL NON-DETECTABLE WARNING TAPE A MINIMUM OF ONE FOOT ABOVE THE PIPE IN ADDITION TO THE DETECTABLE WARNING TAPE

TOWN OF VICTOR NEW YORK

ALL CONSTRUCTION TO CONFORM TO SPECIFICATIONS WRITTEN IN THE VICTOR D&C STANDARDS

SANITARY & STORM SEWER LATERAL RISER DETAIL

NOT TO SCALE

JANUARY 2018

SA / ST-5

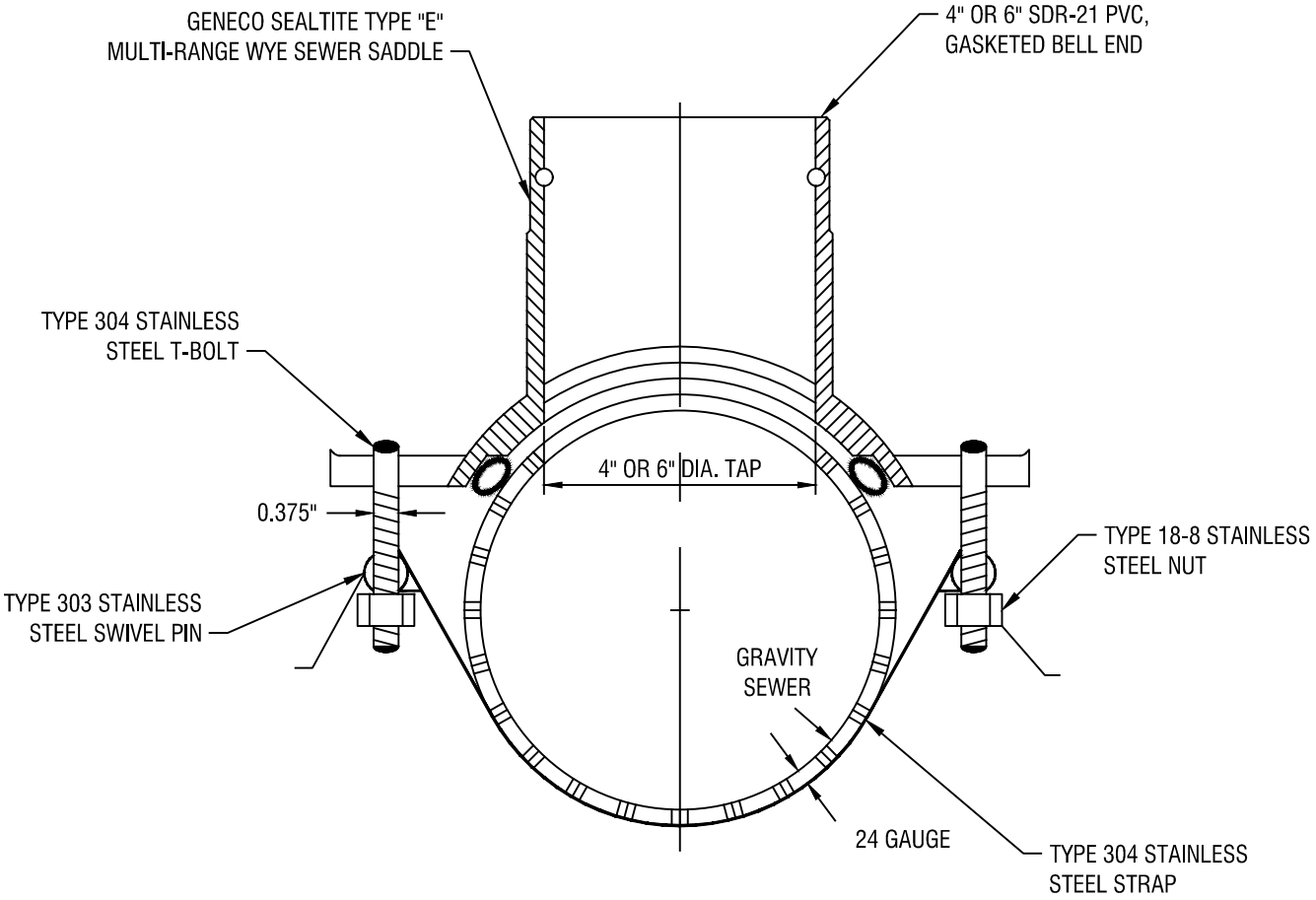

ALL CONSTRUCTION TO CONFORM TO SPECIFICATIONS WRITTEN IN THE VICTOR D&C STANDARDS

town of VICTOR NEW YORK

WYE LATERAL CONNECTION TO SEWER MAIN (TOWN OF FARMINGTON S - 4)

NOT TO SCALE

MARCH 2022

SA-6

DATE/TIME: Monday, March 28, 2022 AT 8:13 AM
FILENAME: \\CASH.lab\P\V\Victor, Town Of\208375 - General Consultation\208375.004 - Annual Update Design & Const\2021 Standards - Working Folder\02 Detail Updates\AutoCad\2022 SA - 6.dwg

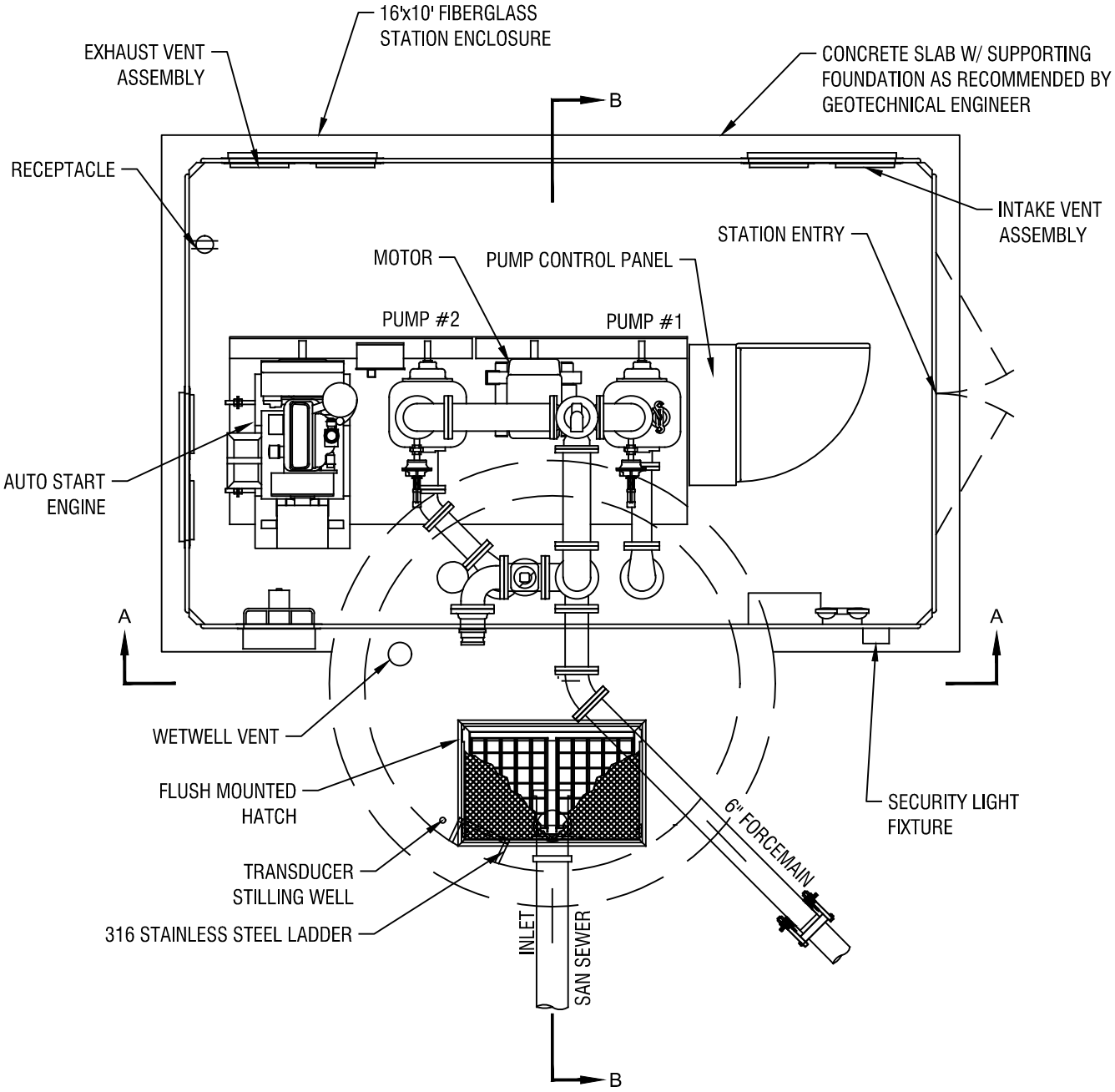

ALL CONSTRUCTION TO CONFORM TO SPECIFICATIONS WRITTEN IN THE VICTOR D&C STANDARDS

town of VICTOR NEW YORK

HIGH FLOW PUMP STATION (TOWN OF FARMINGTON S - 9.1)

NOT TO SCALE

MARCH 2022

SA-7.1

DATE/TIME: Monday, March 28, 2022 AT 9:40 AM
FILENAME: \\CASH.lab\P\V\Victor, Town Of\208375 - General Consultation\208375.004 - Annual Update Design & Const\2021 Standards - Working Folder\02 Detail Updates\AutoCad\2022 SA - 7.0.dwg

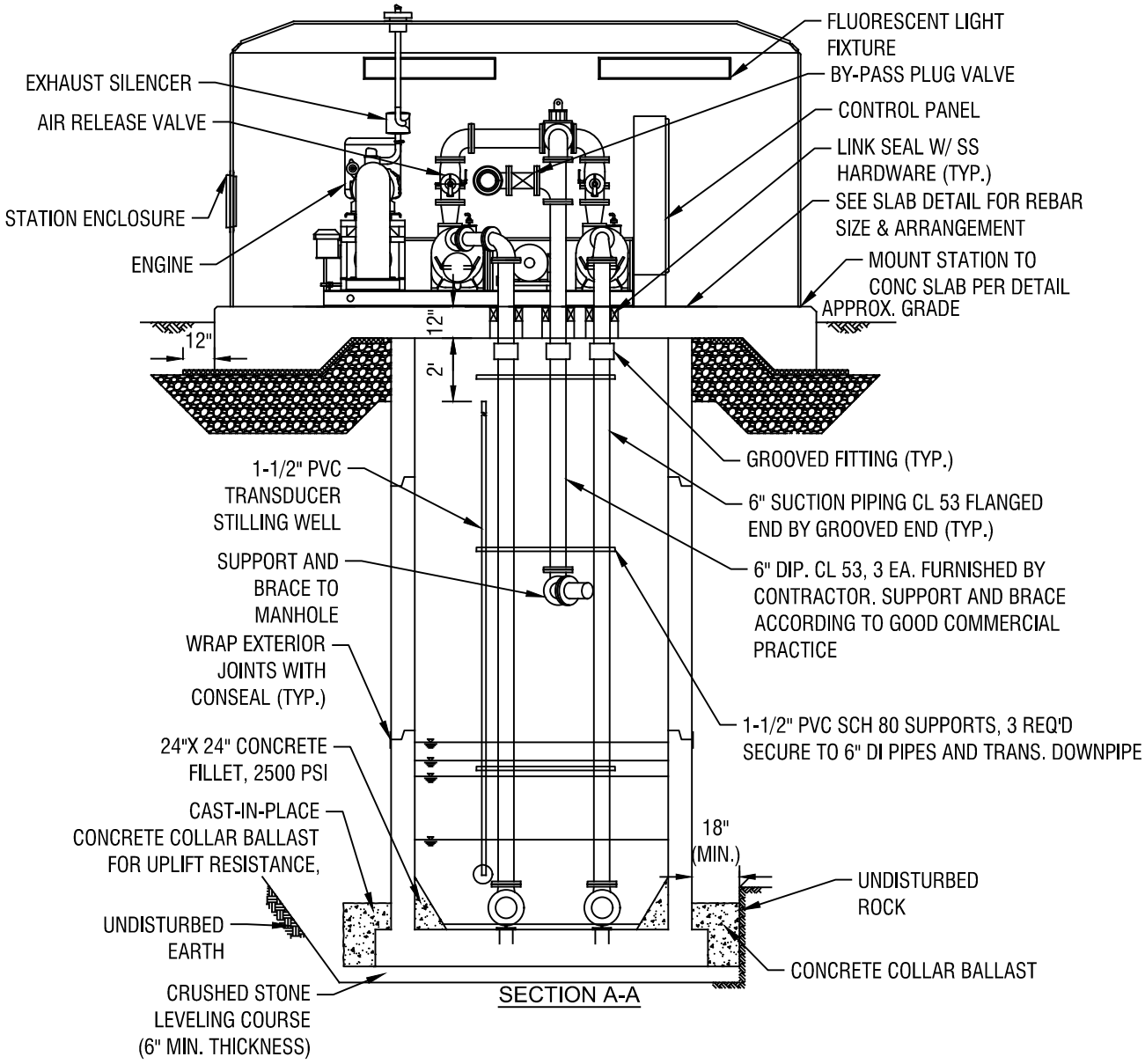

NOTES:

1. WETWELL TO BE INSTALLED IN CONFORMANCE W/ DETAIL FOR STANDARD SANITARY MANHOLE.
2. ALL HARDWARE, SUPPORTS, & BRACKETS INSTALLED WITHIN THE WETWELL SHALL BE 304 SS. DISSIMILAR METALS SHALL BE ISOLATED USING NYLON WASHERS.
3. PROVIDE REDUNDANT LEVEL FLOATS FOR ALL SPECIFIED OPERATION POINTS.
4. FLOATS TO BE INSTALLED W/ RETRIEVABLE NON-METALLIC CHAIN & WEIGHT SYSTEM.
5. ALL DIP INSTALLED WITHIN THE WETWELL SHALL BE CL 53 DIP.

*DIP IN THE WETWELL SHALL BE PAINTED AS FOLLOWS:

- SHOP PRIME W/ TNEMEC SERIES 1 (2.5 - 3.5 mils)
- FIELD PREP & REPRIME AS NEEDED
- 2 COATS OF TNEMEC SERIES 446 (7.0 - 10.0 mils DFT EACH)

town of VICTOR NEW YORK

ALL CONSTRUCTION TO CONFORM TO SPECIFICATIONS WRITTEN IN THE VICTOR D&C STANDARDS

HIGH FLOW PUMP STATION (TOWN OF FARMINGTON S - 9.2)

NOT TO SCALE

MARCH 2022

SA-7.2

DATE/TIME: Monday, March 28, 2022 AT 9:40 AM
FILENAME: \\CASH.lab\P\V\Victor, Town Of\208375 - General Consultation\208375.004 - Annual Update Design & Const\2021 Standards - Working Folder\02 Detail Updates\AutoCad\2022 SA - 7.0.dwg

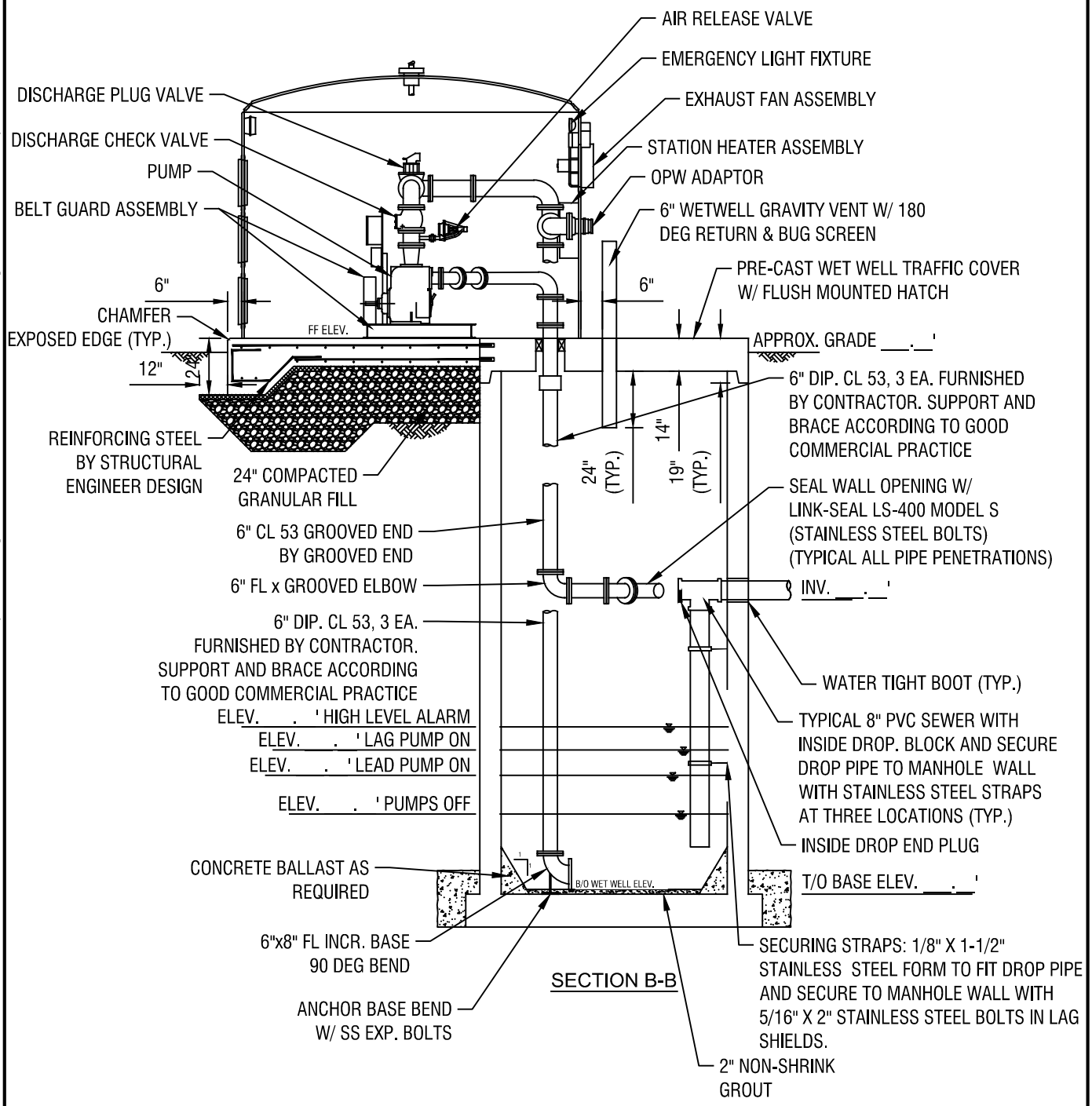

ALL CONSTRUCTION TO CONFORM TO SPECIFICATIONS WRITTEN IN THE VICTOR D&C STANDARDS

town of VICTOR NEW YORK

HIGH FLOW PUMP STATION (TOWN OF FARMINGTON S - 9.3)

NOT TO SCALE

MARCH 2022

SA-7.3

DATE/TIME: Monday, March 28, 2022 AT 9:40 AM
FILENAME: \\CASH.lab\P\V\Victor, Town Of\208375 - General Consultation\208375.004 - Annual Update Design & Const\2021 Standards - Working Folder\02 Detail Updates\AutoCad\2022 SA - 7.0.dwg

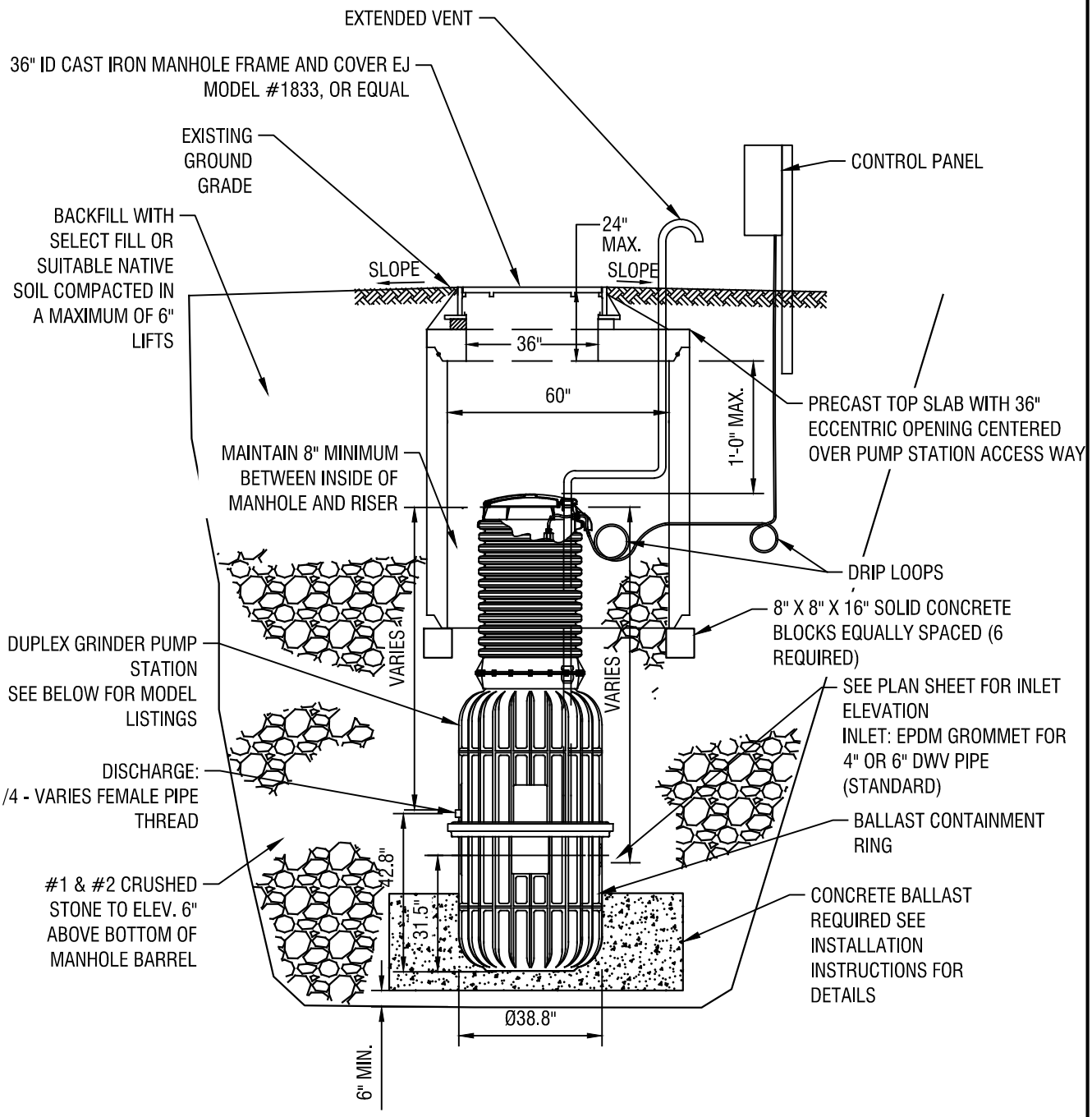

DUPLEX GRINDER PUMP STATION MODELS:
DH152/DR152 FOR 3000 GPD
DH272/DR272 FOR 5000 GPD
DH502/DR502 FOR 6000 GPD

NOTE:
PROVIDE COMBINATION DOUBLE CHECK VALVE / ISOLATION VALVE ON DISCHARGE

town of VICTOR NEW YORK

ALL CONSTRUCTION TO CONFORM TO SPECIFICATIONS WRITTEN IN THE VICTOR D&C STANDARDS

LOW FLOW PUMP STATION (TOWN OF FARMINGTON S - 10)

NOT TO SCALE

MARCH 2022

SA-8

DATE/TIME: Monday, March 28, 2022 AT 12:55 PM
FILENAME: \\CASH.lab\P\V\Victor, Town Of\208375 - General Consultation\208375.004 - Annual Update Design & Const\2021 Standards - Working Folder\02 Detail Updates\AutoCad\2022 SA - 8.dwg

DATE/TIME: Monday, March 28, 2022 AT 1:04 PM
FILENAME: \\CASH.lab\P\V\Victor, Town Of\208375 - General Consultation\208375.004 - Annual Update Design & Const\2021 Standards - Working Folder\02 Detail Updates\AutoCad\2022 SA - 9.dwg

THE FOLLOWING ARE REQUIREMENTS FOR PUMP STATIONS:

THIS PAGE IS TO BE ADDED TO THE MAP INCLUDING THE CONTROL PANEL AND PUMP STATION

1. 10x16 ABOVE GROUND SEWAGE LIFT STATION BY THE GORMAN-RUPP COMPANY (MODEL No. REQUIRED). EXAMPLE: MODEL T4A71S-B 5 HP MOTORS.

2. STAINLESS STEEL CONTROL PANEL IN CONFORMANCE OF APPLICABLE SECTION OF NATIONAL ELECTRICAL MANUFACTURERS ASSOCIATION (NEMA) STANDARDS FOR TYPE 4 ELECTRICAL ENCLOSURES FOR INCOMING POWER, MOTOR, AND LIQUID CONTROLS, AS REQUIRED BY TOWN DEPARTMENT.

3. THE CONTROLLER TO BE ALLEN-BRADLEY MICROLOGIX SYSTEM EQUIPPED WITH A MODEL LRP CPU WITH 14K MEMORY, AND A CONFIGURABLE PORT WHICH IS RESERVED FOR FUTURE CUSTOMER USE INCLUDING THE LIQUID LEVEL CONTROL SENSORS PER TOWN OF FARMINGTON SEWER DEPARTMENT SPECIFICATION.

4. THE SYSTEM SHALL HAVE THE FOLLOWING MONITORING CAPABILITIES:

   a. WELL LEVEL
   b. WELL LEVEL HIGH AND LOW ALARMS
   c. AC POWER FAILURE
   d. WELL DRAW DOWN RATE (USING WEB BASED RATE OF CHANGE SET POINTS)
   e. PUMP 1 & 2 CURRENT DRAW (WITH SENSE TOROID OPTION)
   f. PUMP 1 & 2 ON/OFF CYCLES
   g. PUMP 1 & 2 RUN TIME
   h. PUMP 1 & 2 FAILURE
   i. PUMP 1 & 2 ON/OFF AUTOMATIC PUMP CONTROL FROM WELL(S) LEVEL(S)
   j. RAINFALL (IF CONNECTED TO AN EXTERNAL RAIN GAUGE)
   k. TIME STAMPS OF WHEN RAIN EVENTS OCCURRED
   l. ALARM NOTIFICATION VIA E-MAIL, PAGER, TEXT, VOICE ALERTS
   m. HISTORICAL LOG SHOWING ALL ALARM HISTORY AND CONTINUOUS WATER LEVEL - UP TO THREE YEARS DATA ON-LINE.

town of VICTOR NEW YORK

ALL CONSTRUCTION TO CONFORM TO SPECIFICATIONS WRITTEN IN THE VICTOR D&C STANDARDS

PUMP STATION NOTES & REQUIREMENTS (TOWN OF FARMINGTON S - 11)

NOT TO SCALE

MARCH 2022

SA-9

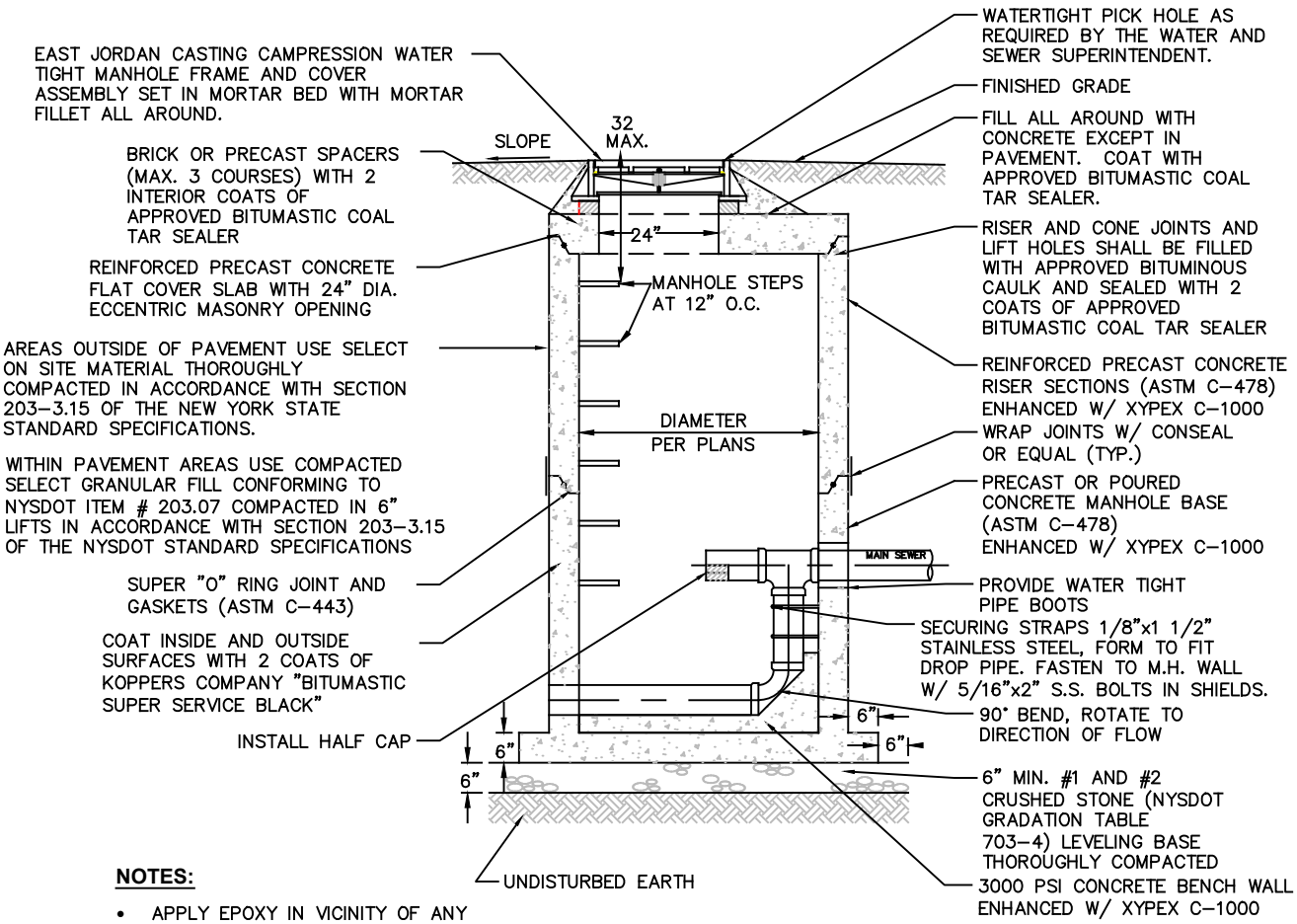

NOTES:

- APPLY EPOXY IN VICINITY OF ANY FORCEMAIN CONNECTION
- STEP ALIGNMENT LESS THAN 1" (VERTICAL) ALIGNMENT TOLERANCE

town of VICTOR NEW YORK

ALL CONSTRUCTION TO CONFORM TO SPECIFICATIONS WRITTEN IN THE VICTOR D&C STANDARDS

INSIDE DROP SEWER MANHOLE (TOWN OF FARMINGTON S-12.0)

NOT TO SCALE

MAY 2023

SA-10

DATE/TIME: Thursday, March 23, 2023 AT 12:25 PM
FILENAME: \\CASH.lab\P\V\Victor, Town Of\208375 - General Consultation\208375.004 - Annual Update Design & Const\2023 Standards\2023 03-10 MRB CAD Dwg\S-12.0 (Inside Drop Sewer Manhole).dwg

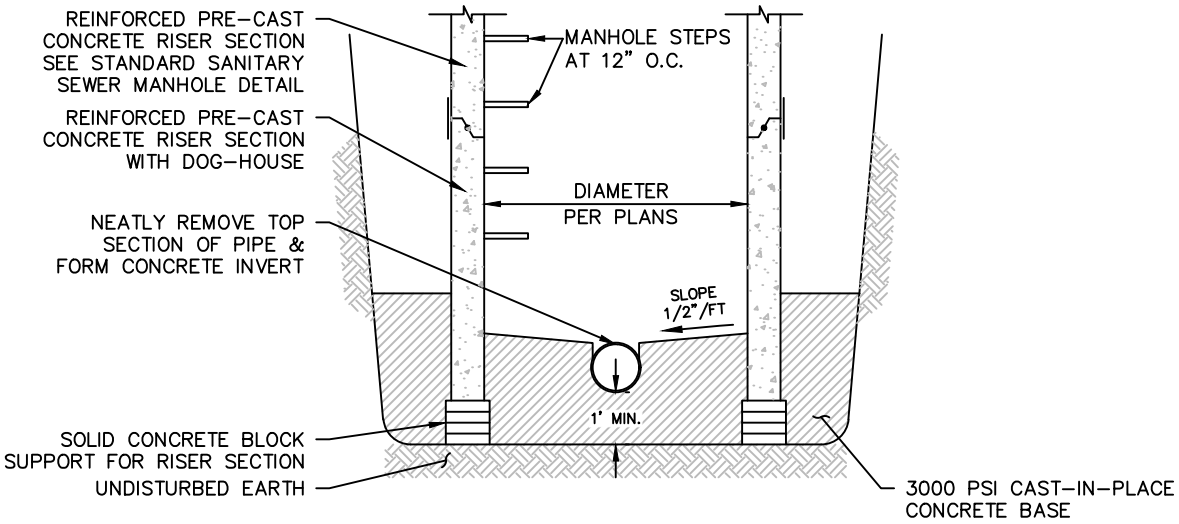

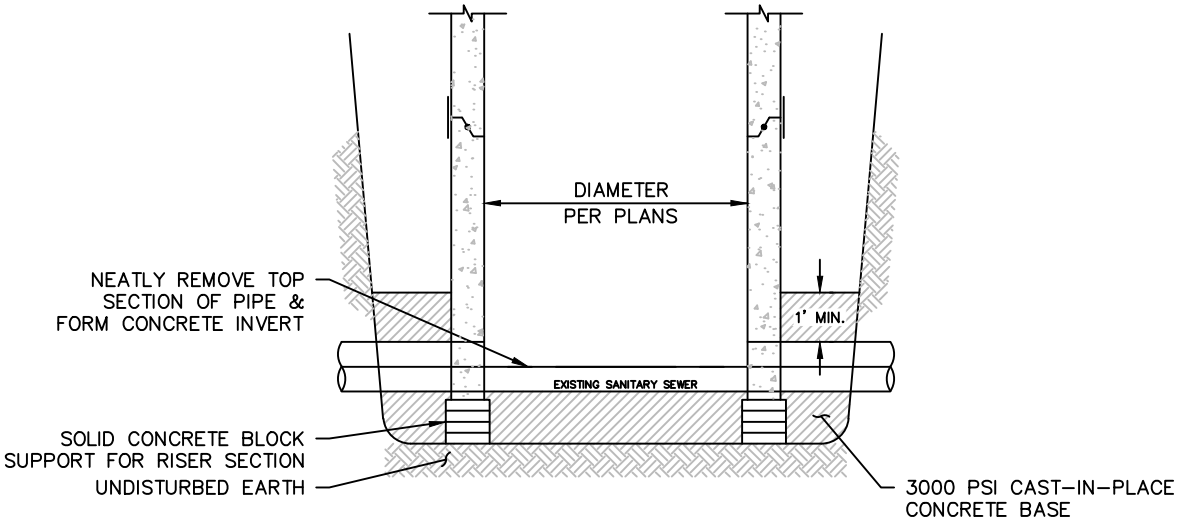

NOTES:

- USE FLEXOLITH GEL BY DURAL OR SIKADUR 33 BY SIKA EPOXY MORTAR TO FILL AROUND PIPE. NO SLEEVE REQUIRED.
- TAR SEAL ALL EXPOSED INTERIOR/EXTERIOR MANHOLE SURFACES AFTER PLACEMENT OF CONCRETE, AND EPOXY BENCH WALLS.
- CONTRACTOR WILL BE RESPONSIBLE FOR MAINTENANCE OF SEWER DURING CONSTRUCTION.

town of VICTOR NEW YORK

ALL CONSTRUCTION TO CONFORM TO SPECIFICATIONS WRITTEN IN THE VICTOR D&C STANDARDS

DOG-HOUSE SEWER MANHOLE (TOWN OF FARMINGTON S-13.0)

NOT TO SCALE

MAY 2023

SA-11

DATE/TIME: Monday, May 15, 2023 AT 4:30 PM
FILENAME: \\CASH.lab\P\V\Victor, Town Of\208375 - General Consultation\208375.004 - Annual Update Design & Const\2023 Standards\2023 03-10 MRB CAD Dwg\S-13.0 (Dog-House Sanitary Sewer Manhole).dwg

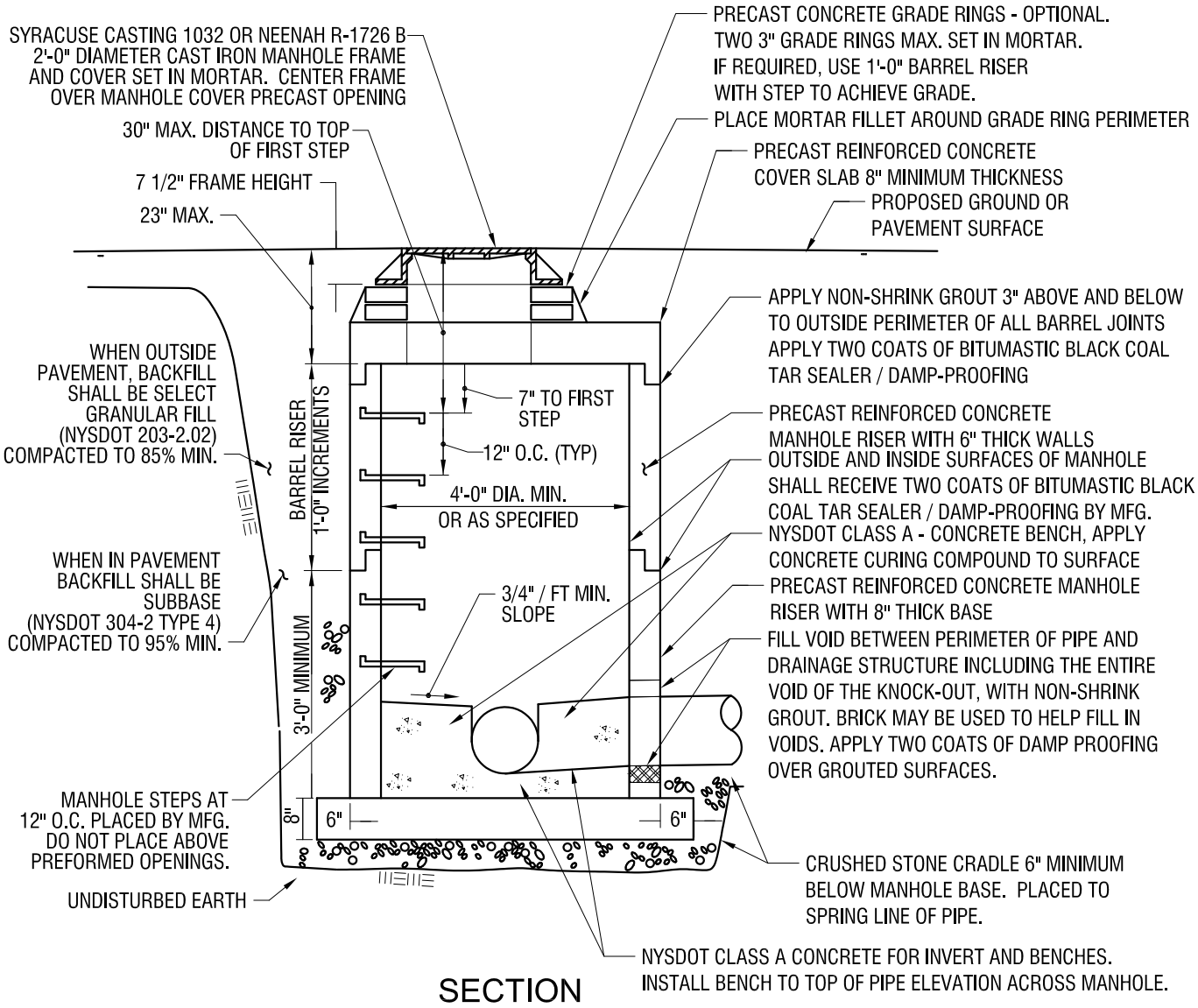

SECTION

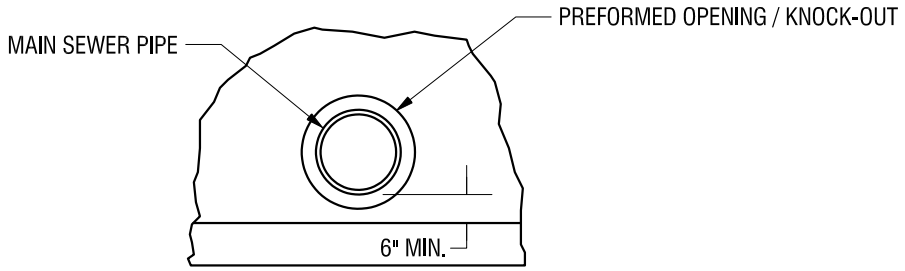

PREFORMED
OPENING SECTION

TOWN OF VICTOR NEW YORK

ALL CONSTRUCTION TO CONFORM TO SPECIFICATIONS WRITTEN IN THE VICTOR D&C STANDARDS

STORM SEWER DRAINAGE MANHOLE SET IN PAVEMENT OR GRASS

NOT TO SCALE

JANUARY 2018

ST-1

DATE/TIME: Friday, January 12, 2018 AT 9:47 AM
FILENAME: J:\Victor, Town Of\208375 - General Consultation\208375.004 - Annual Update Design & Const\2016 Standards\2018 Updates Victor D&C Standard Details\ST-1.dwg

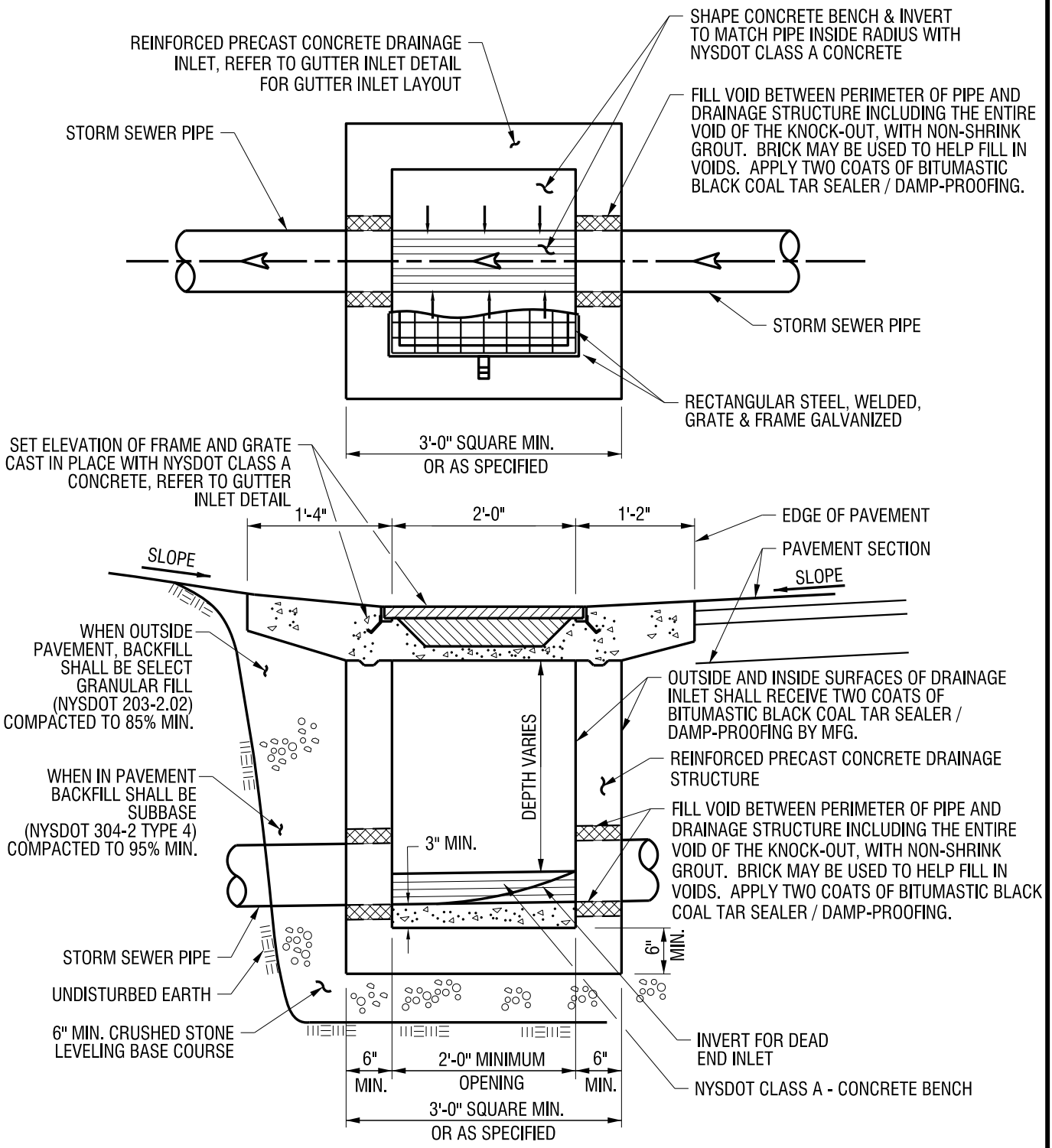

NOTE:

USE SPECIAL INLET ALONG ROADWAYS WITH CENTERLINE GRADES 6.00% AND GREATER

TOWN OF VICTOR NEW YORK

ALL CONSTRUCTION TO CONFORM TO SPECIFICATIONS WRITTEN IN THE VICTOR D&C STANDARDS

STORM SEWER DRAINAGE INLET PLACED IN GUTTER DETAIL

NOT TO SCALE

JANUARY 2014

ST-2

DATE/TIME: Thursday, February 06, 2014 AT 7:17 AM
FILENAME: J:\Victor, Town Of\208375 - General Consultation\208375.004 - Annual Update Design & Const\2014 Standrads\2014 Updates Victor D&C Standard Details\ST-2.Dgn

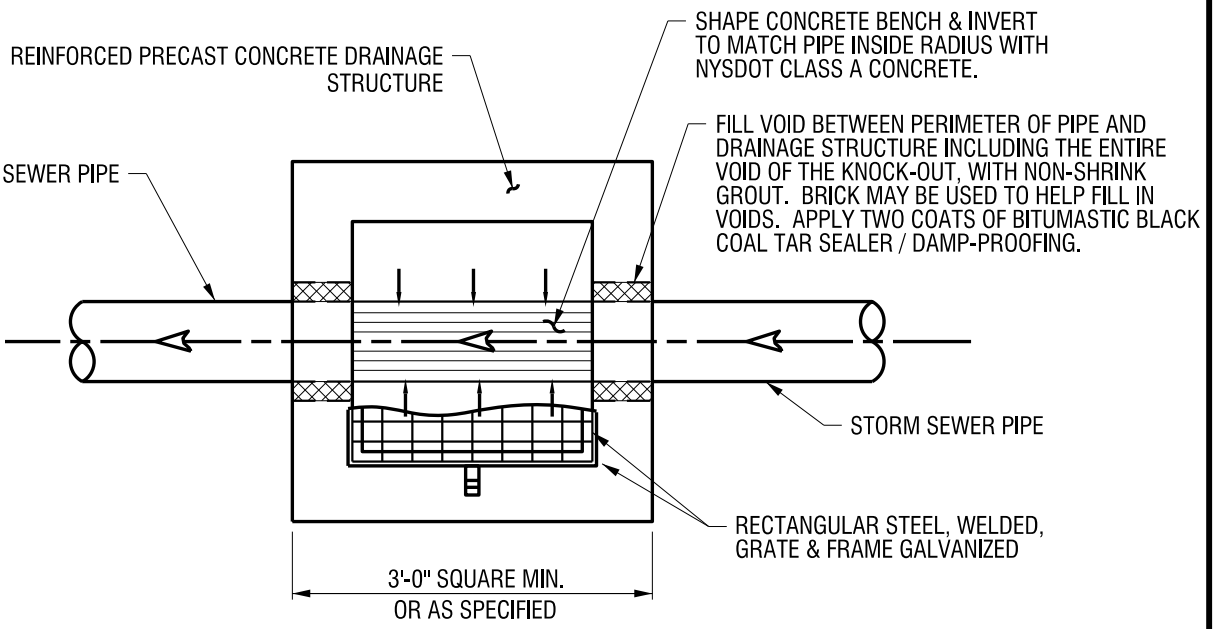

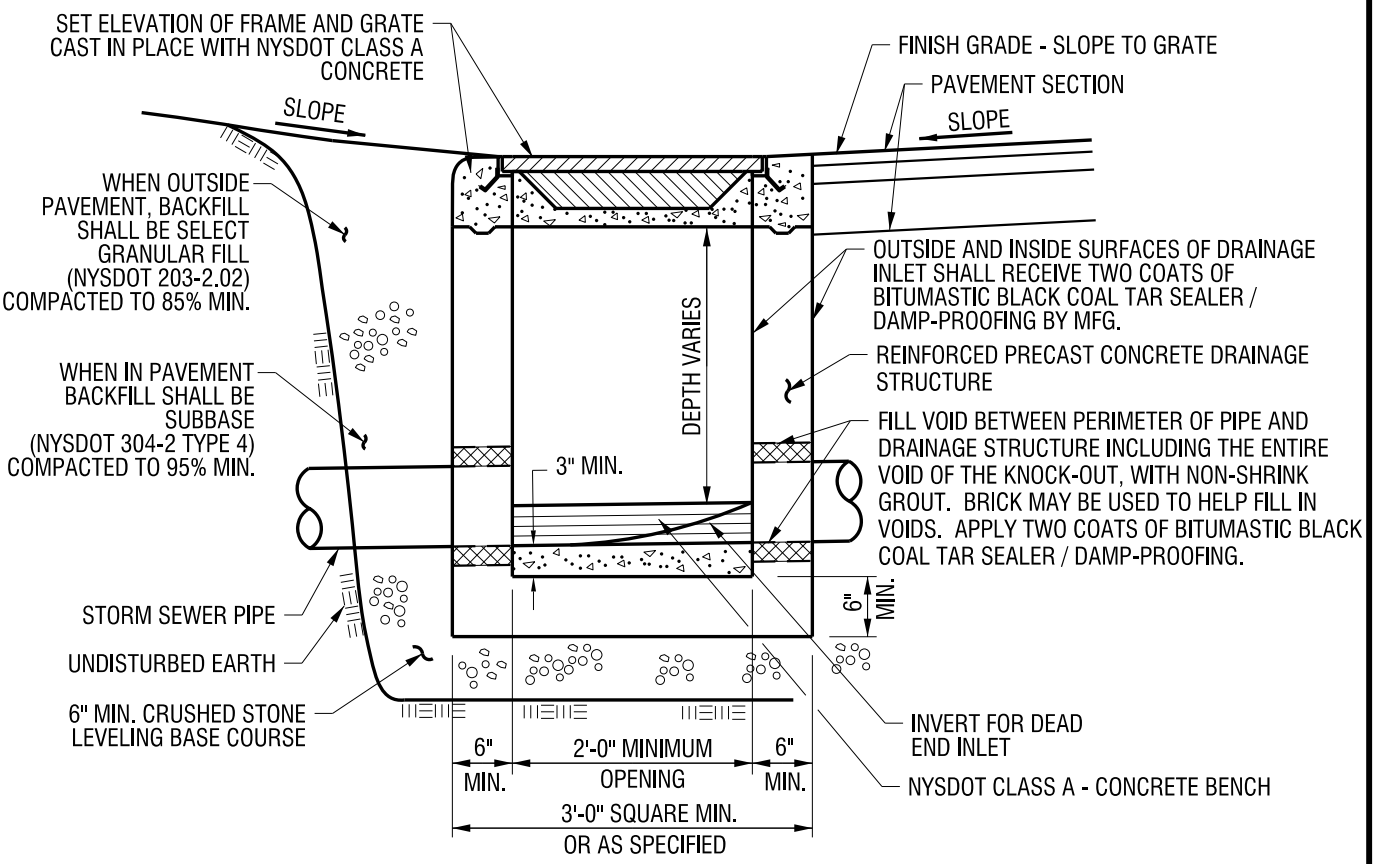

ALL CONSTRUCTION TO CONFORM TO SPECIFICATIONS WRITTEN IN THE VICTOR D&C STANDARDS

TOWN OF VICTOR NEW YORK

STORM SEWER DRAINAGE INLET SET IN PAVEMENT OR GRASS

NOT TO SCALE

JANUARY 2014

ST-3

DATE/TIME: Thursday, February 06, 2014 AT 7:17 AM
FILENAME: J:\Victor, Town Of\208375 - General Consultation\208375.004 - Annual Update Design & Const\2014 Standrads\2014 Updates Victor D&C Standard Details\ST-3.Dgn

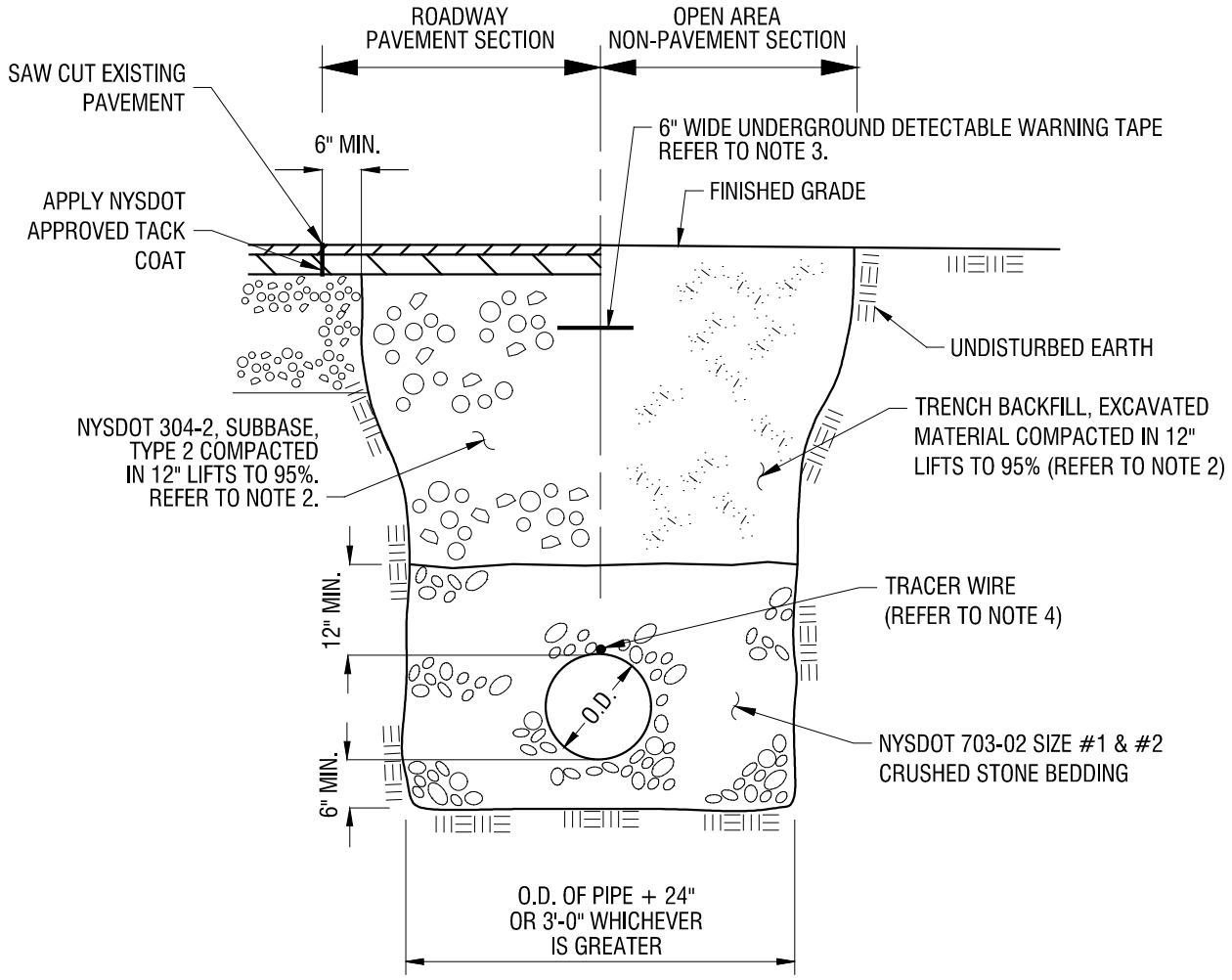

HDPE & PVC / STORM & SANITARY SEWER PIPE

NOTES:

1) HDPE STORM SEWER PIPE SHALL BE NYSDOT 706.14 SMOOTH INTERIOR CORRUGATED POLETHYLENE PIPE (SICPP) CONFORMING TO AASHTO M-252 AND M-294.

2) COMPACTION AND COMPACTION TESTING OF TRENCHES SHALL BE IN ACCORDANCE WITH SECTIONS 3.4.5.2 AND 3.4.6 OF THE D&C STANDARDS.

3) 6-INCH WIDE UNDERGROUND DETECTABLE WARNING TAPE SHALL BE USED DURING INSTALLATION OF ALL NON-METALLIC STORM AND SANITARY PIPES. FOR PIPES UP TO FOUR FEET DEEP, INSTALL DETECTABLE WARNING TAPE BURIED AT MANUFACTURER'S RECOMMEND DEPTH. FOR PIPES DEEPER THAN FOUR FEET, IN ADDITION TO THE DETECTABLE WARNING TAPE, INSTALL NON-DETECTABLE WARNING TAPE A MINIMUM OF 24" ABOVE THE PIPE

4) INSTALL 10 GAUGE COPPERHEAD TRACER WIRE FOR ALL NONMETALLIC SANITARY & WATER MAINS

town of VICTOR NEW YORK

ALL CONSTRUCTION TO CONFORM TO SPECIFICATIONS WRITTEN IN THE VICTOR D&C STANDARDS

HDPE, PVC, & DIP STORM & SANITARY SEWER PIPE TRENCH DETAIL

NOT TO SCALE

MAY 2023

TR-1

DATE/TIME: Monday, May 15, 2023 AT 3:35 PM
FILENAME: \\CASH.lab\P\V\Victor, Town Of\208375 - General Consultation\208375.004 - Annual Update Design & Const\2023 Standards\Detail Updates\2023 TR-5.dwg

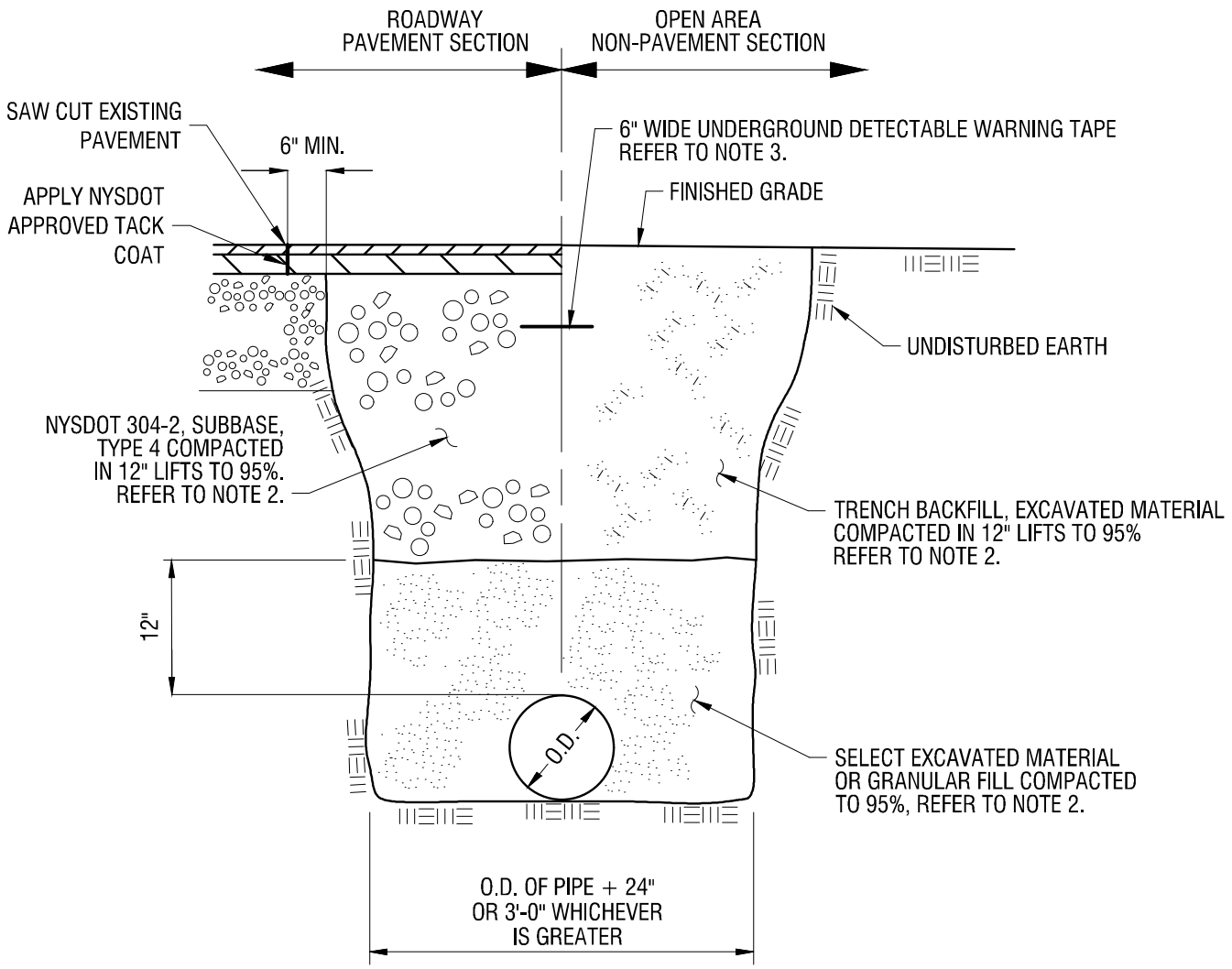

RIGID PIPE
RCP & CMP / STORM SEWER
AND
DIP SANITARY FORCE MAIN

NOTES:

1) PROVIDE 6" MINIMUM CRUSHED STONE CRADLE UNDER PIPE IN ROCK AREAS AND WHERE REQUIRED DUE TO TRENCH AND SOIL CONDITIONS.

2) COMPACTION AND COMPACTION TESTING OF TRENCHES SHALL BE IN ACCORDANCE WITH SECTIONS 3.4.5.2 AND 3.4.6 OF THE D&C STANDARDS.

3) 6-INCH WIDE UNDERGROUND DETECTABLE WARNING TAPE SHALL BE USED DURING INSTALLATION OF ALL NON-METALLIC STORM AND SANITARY PIPES. FOR PIPES UP TO FOUR FEET DEEP, INSTALL DETECTABLE WARNING TAPE BURIED AT MANUFACTURER'S RECOMMEND DEPTH. FOR PIPES DEEPER THAN FOUR FEET, IN ADDITION TO THE DETECTABLE WARNING TAPE, INSTALL NON-DETECTABLE WARNING TAPE A MINIMUM OF 24" ABOVE THE PIPE

town of VICTOR NEW YORK

ALL CONSTRUCTION TO CONFORM TO SPECIFICATIONS WRITTEN IN THE VICTOR D&C STANDARDS

RIGID PIPE STORM & SANITARY SEWER PIPE TRENCH DETAIL

NOT TO SCALE

DECEMBER 2021

TR-2

DATE/TIME: Wednesday, November 03, 2021 AT 11:06 AM
FILENAME: \\Projects6\v\Victor, Town Of\208375 - General Consultation\208375.004 - Annual Update Design & Const\2021 Standards - Working Folder\02 Detail Updates\AutoCad\2021 TR-2.dwg

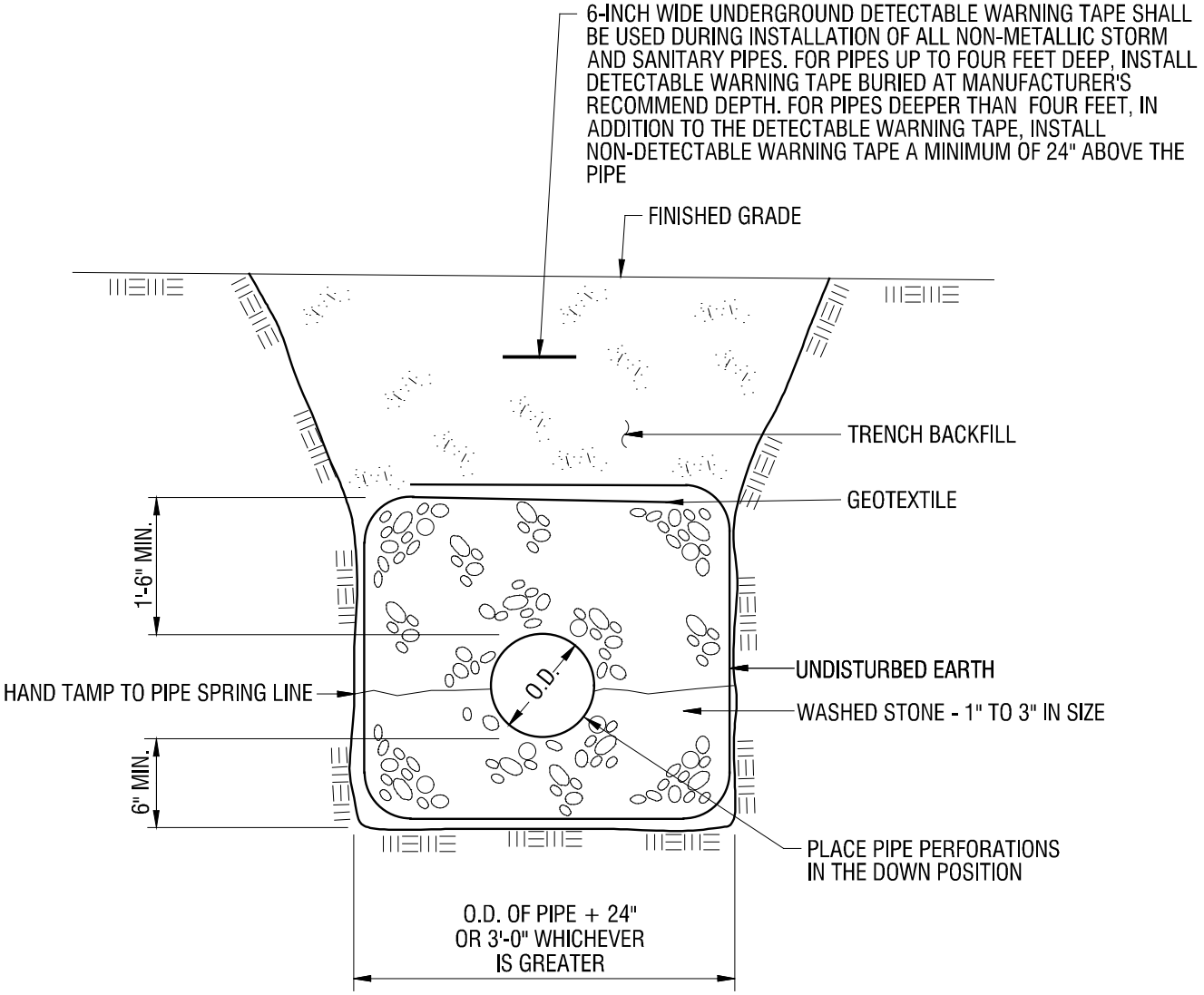

HDPE & PVC PERFORATED PIPE NON-UNDERDRAIN

NOTES:

1) PROVIDE 6" MINIMUM CRUSHED STONE CRADLE UNDER PIPE IN ROCK AREAS AND WHERE REQUIRED DUE TO TRENCH AND SOIL CONDITIONS.

2) HDPE STORM SEWER PIPE SHALL BE NYSDOT 706.14 SMOOTH INTERIOR CORRUGATED POLETHYLENE PIPE (SICPP) CONFORMING TO AASHTO M-252 AND M-294.

3) COMPACTION AND COMPACTION TESTING OF TRENCHES SHALL BE IN ACCORDANCE WITH SECTIONS 3.4.5.2 AND 3.4.6 OF THE D&C STANDARDS.

town of VICTOR NEW YORK

ALL CONSTRUCTION TO CONFORM TO SPECIFICATIONS WRITTEN IN THE VICTOR D&C STANDARDS

HDPE & PVC PERFORATED PIPE STORM SEWER BEDDING DETAIL

NOT TO SCALE

DECEMBER 2021

TR-3

DATE/TIME: Monday, November 08, 2021 AT 1:05 PM
FILENAME: \\Projects6\v\Victor, Town Of\208375 - General Consultation\208375.004 - Annual Update Design & Const\2021 Standards - Working Folder\02 Detail Updates\AutoCad\2021 TR-3.dwg

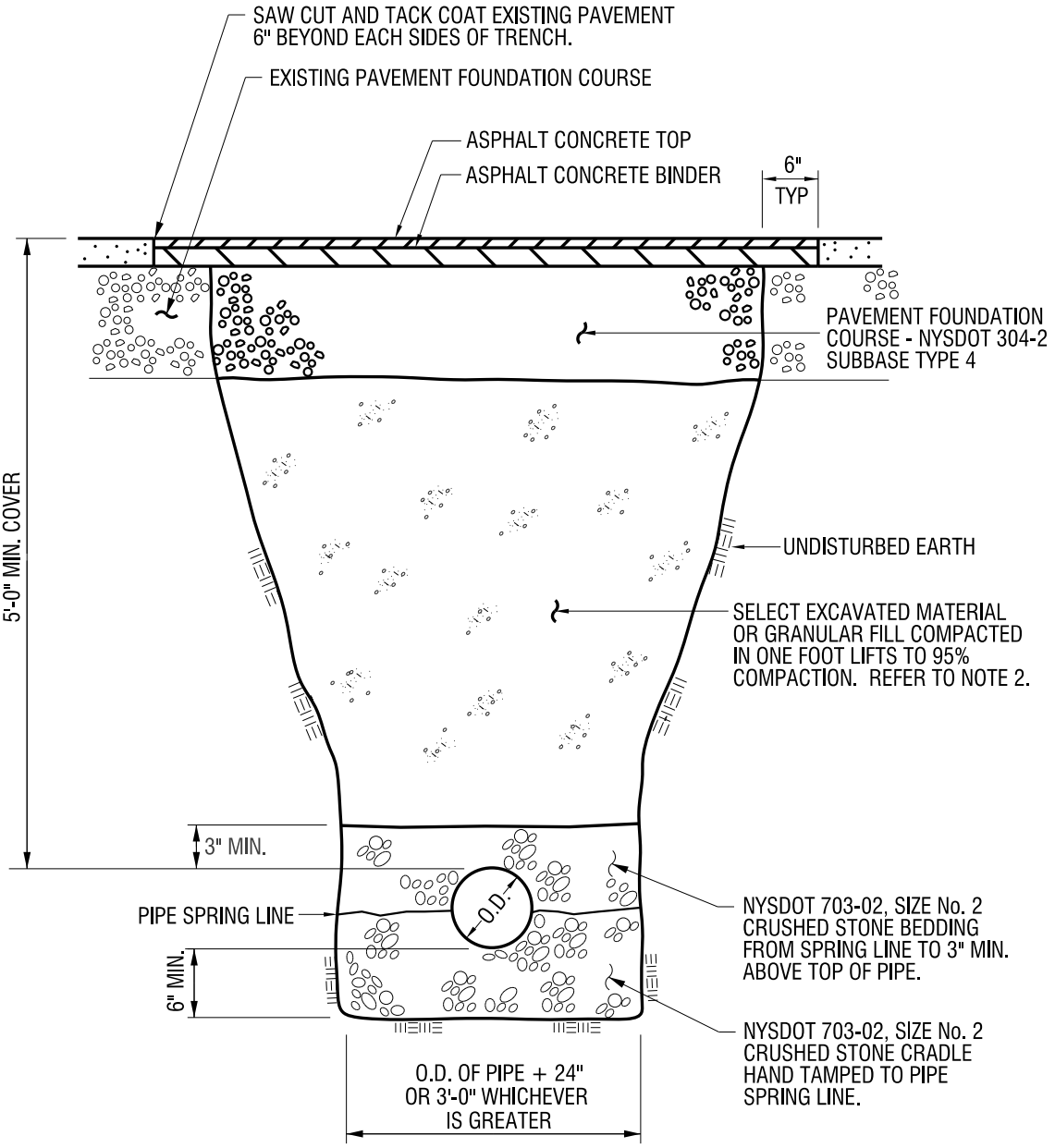

NOTES:

1) HDPE STORM SEWER PIPE SHALL BE NYSDOT 706.14 SMOOTH INTERIOR CORRUGATED POLETHYLENE PIPE (SICPP) CONFORMING TO AASHTO M-252 AND M-294.

2) COMPACTION AND COMPACTION TESTING OF TRENCHES SHALL BE IN ACCORDANCE WITH SECTIONS 3.4.5.2 AND 3.4.6 OF THE D&C STANDARDS.

TOWN OF VICTOR NEW YORK

ALL CONSTRUCTION TO CONFORM TO SPECIFICATIONS WRITTEN IN THE VICTOR D&C STANDARDS

TYPICAL TRENCH SECTION IN NON-ROADWAY PAVEMENT AREAS

NOT TO SCALE

JANUARY 2014

TR-4

DATE/TIME: Thursday, February 06, 2014 AT 7:19 AM
FILENAME: J:\Victor, Town Of\208375 - General Consultation\208375.004 - Annual Update Design & Const\2014 Standrads\2014 Updates Victor D&C Standard Details\TR-4.Dgn

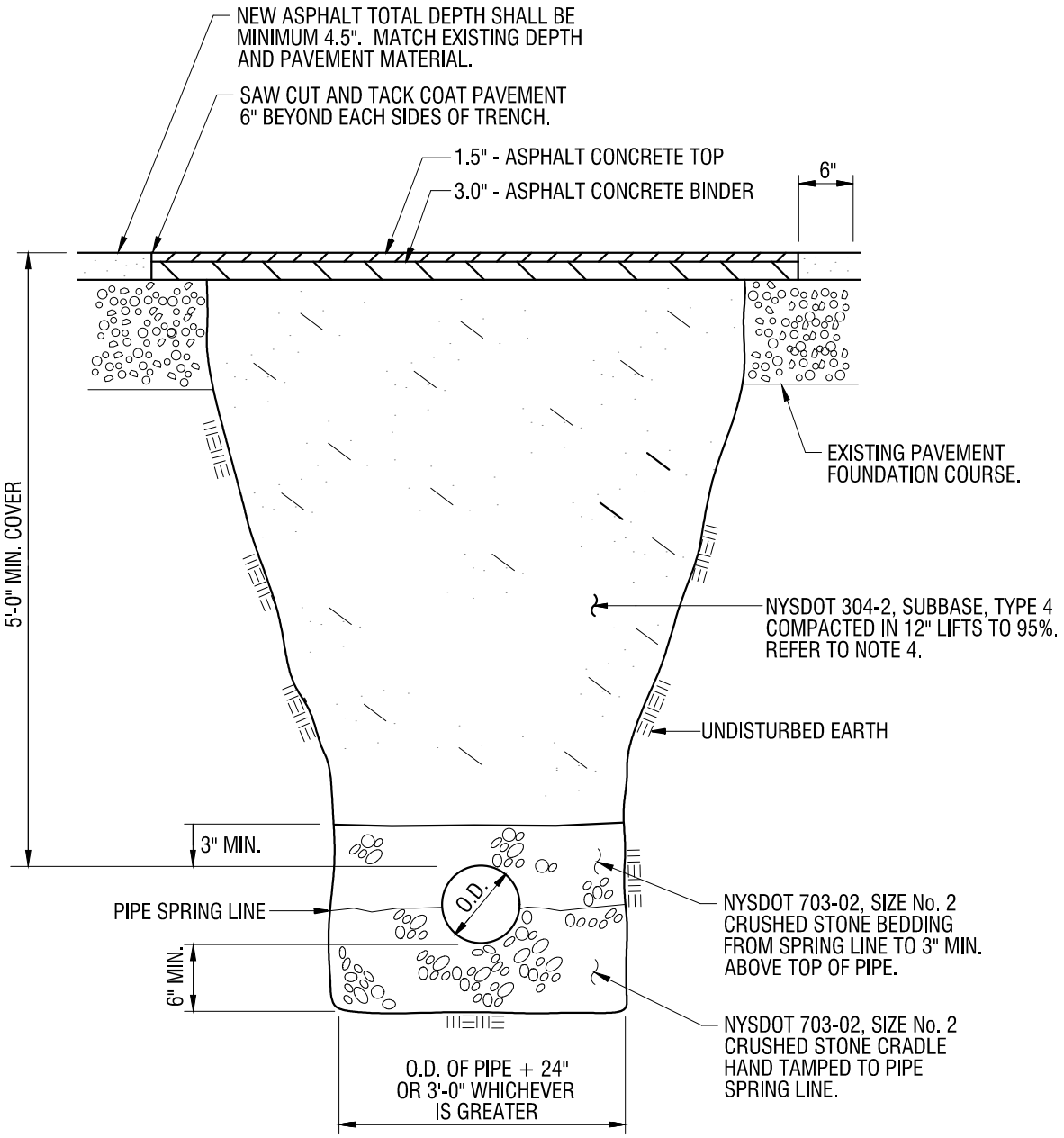

NOTES:

1) OPEN CUTTING TOWN ROADS IS NOT ALLOWED UNLESS AN EXCEPTION IS GRANTED BY THE TOWN OF VICTOR HIGHWAY SUPERINTENDENT

2) HDPE STORM SEWER PIPE SHALL BE NYSDOT 706.14 SMOOTH INTERIOR CORRUGATED POLYETHYLENE PIPE (SICPP) CONFORMING TO AASHTO M-252 AND M-294.

3) COMPACTION AND COMPACTION TESTING OF TRENCHES SHALL BE IN ACCORDANCE WITH SECTIONS 3.4.5.2 AND 3.4.6 OF THE D&C STANDARDS.

4) K-KRETE - CONTROLLED DENSITY FILL MAY BE USED ONLY IF APPROVED BY THE TOWN OF VICTOR HIGHWAY SUPERINTENDENT.

town of VICTOR NEW YORK

ALL CONSTRUCTION TO CONFORM TO SPECIFICATIONS WRITTEN IN THE VICTOR D&C STANDARDS

TYPICAL TRENCH SECTION CROSSING EXISTING TOWN ROAD

NOT TO SCALE

MAY 2023

TR-5

DATE/TIME: Monday, May 15, 2023 AT 3:51 PM
FILENAME: \\CASH.lab\P\V\Victor, Town Of\208375 - General Consultation\208375.004 - Annual Update Design & Const\2023 Standards\Detail Updates\2023 TR-5.dwg

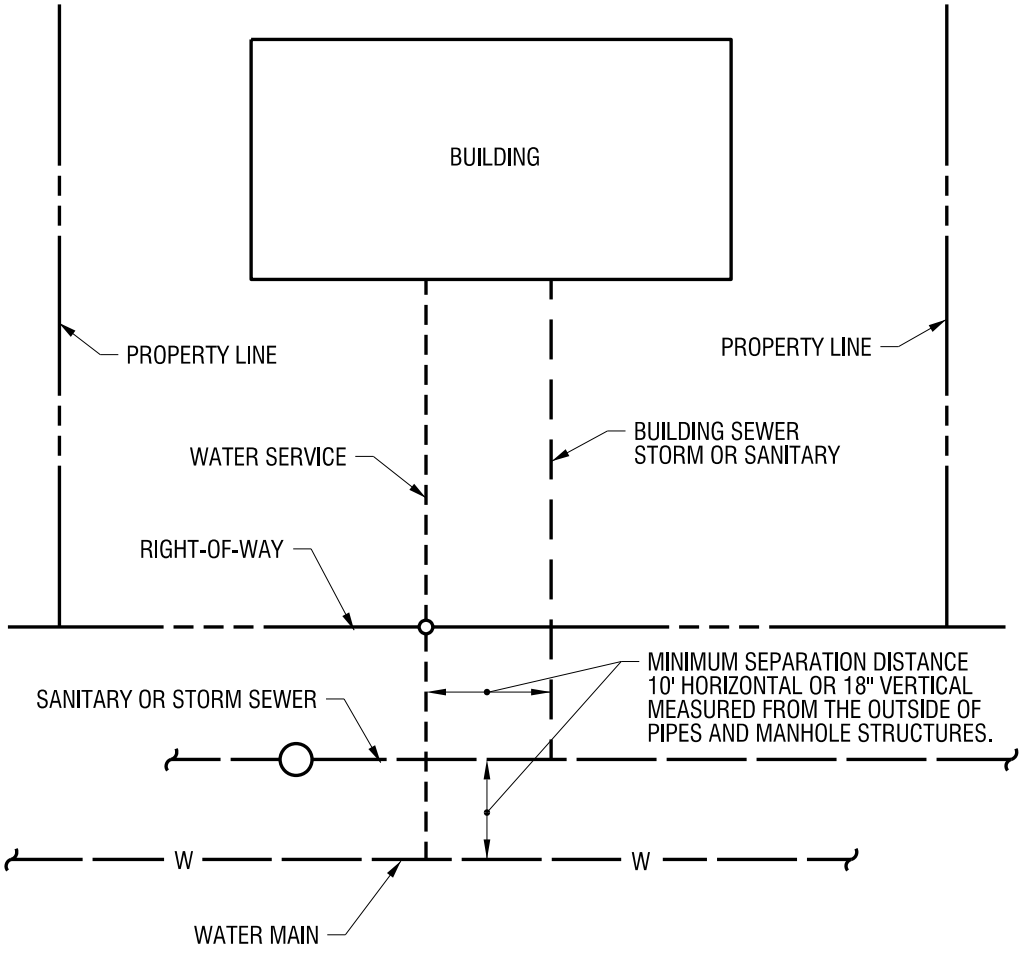

NOTES:

1) REFER TO TOWN OF VICTOR DESIGN AND CONSTRUCTION STANDARDS FOR LAND DEVELOPMENT - SECTION 2, 3 & 6 FOR UTILITY REQUIREMENTS.

2) ALL CURB BOXES AND SEWER CLEANOUTS SHALL BE BUILT OUTSIDE OF THE DRIVEWAY PAVEMENT SURFACE.

TOWN OF VICTOR NEW YORK

ALL CONSTRUCTION TO CONFORM TO SPECIFICATIONS WRITTEN IN THE VICTOR D&C STANDARDS

WATER AND SEWER HORIZONTAL SEPARATION DETAIL

NOT TO SCALE

JANUARY 2014

WS-1

DATE/TIME: Thursday, February 06, 2014 AT 7:19 AM
FILENAME: J:\Victor, Town Of\208375 - General Consultation\208375.004 - Annual Update Design & Const\2014 Standrads\2014 Updates Victor D&C Standard Details\WS-1.Dgn

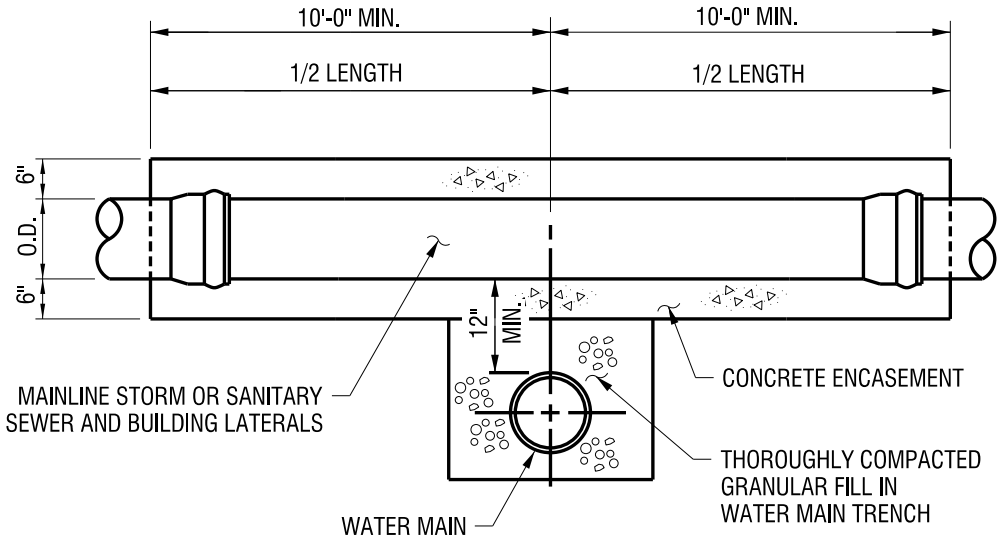

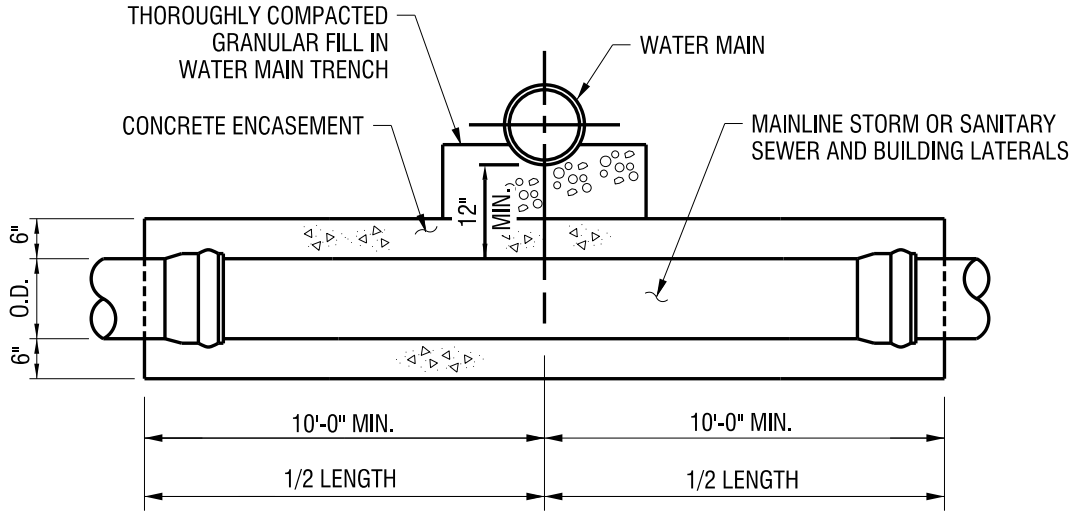

NOTES:

1) PLACE WATER MAIN JOINTS EQUAL DISTANT FROM THE MAIN OR BUILDING SEWER.

2) WRAP ALL PIPE IN POLYETHYLENE FILM BEFORE ENCASING IN CONCRETE TO PREVENT ADHESION OF CONCRETE TO THE PIPE.

TOWN OF VICTOR NEW YORK

ALL CONSTRUCTION TO CONFORM TO SPECIFICATIONS WRITTEN IN THE VICTOR D&C STANDARDS

WATER MAIN AND SEWER CROSSING VERTICAL SEPARATION LESS THAN 18"

NOT TO SCALE

JANUARY 2014

WS-2

DATE/TIME: Thursday, February 06, 2014 AT 7:20 AM
FILENAME: J:\Victor, Town Of\208375 - General Consultation\208375.004 - Annual Update Design & Const\2014 Standrads\2014 Updates Victor D&C Standard Details\WS-2.Dgn

WATER MAIN / SEWER CROSSING DETAIL

CONDITION	SCHEMATIC	REQUIREMENTS
I WATER LINE ABOVE SEWER LINE	WL MORE THAN 18" INCHES SL	A) WATER LINE AND SEWER LINE PIPE LENGTHS TO BE CENTERED AT CROSSING. EACH LENGTH OF PIPE TO BE 10 FT. MINIMUM.
II WATER LINE ABOVE SEWER LINE	WL 18 INCHES MIN SL	A) WATER LINE AND SEWER LINE PIPE LENGTHS TO BE CENTERED AT CROSSING. EACH LENGTH OF PIPE TO BE 10 FT. MINIMUM. B) WHEN BOTH WATER LINE AND SEWER LINE ARE NEW, SLEEVE SEWER LINE WITH STEEL CASING FOR 10 FT. EACH SIDE OF CROSSING. -OR- WHEN ONE LINE IS EXISTING, SLEEVE PIPE BEING INSTALLED WITH STEEL CASING FOR 10 FT. EACH SIDE OF CROSSING.
III SEWER LINE ABOVE WATER LINE	SL 18 INCHES MIN WL	A) WATER LINE AND SEWER LINE PIPE LENGTHS TO BE CENTERED AT CROSSING. EACH LENGTH OF PIPE TO BE 10 FT. MINIMUM. B) SLEEVE SEWER LINE WITH "STEEL CASING FOR 10FT." EACH SIDE OF CROSSING. C) PROVIDE CRADLE OF CONCRETE OR CRUSHER RUN STONE (SEE TRENCH SECTION DETAIL BELOW) FOR WATER LINE AND SEWER LINE FOR 10 FT. EACH SIDE OF CROSSING.

LEGEND

SYMBOL	DESCRIPTION
WL	(WATER LINE)
SL	(SEWER LINE, SANITARY OR STORM)
D	(OUTSIDE DIAMETER OF PIPE)

NOTE:
IN NO CASE SHALL PIPES EVER BE CLOSER THAN 12" INCHES APART VERTICALLY. DISTANCES ARE MEASURED BETWEEN OUTSIDES OF PIPES.

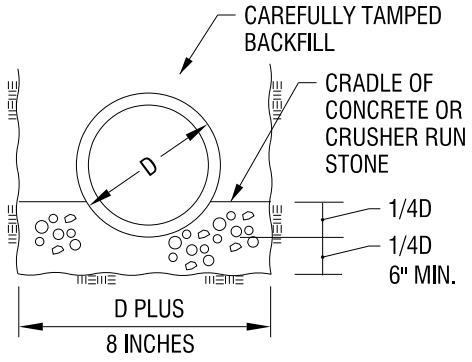

TOWN OF VICTOR NEW YORK

ALL CONSTRUCTION TO CONFORM TO SPECIFICATIONS WRITTEN IN THE VICTOR D&C STANDARDS

WATER MAIN AND SEWER CROSSING DETAIL

NOT TO SCALE

JANUARY 2014

WS-3

DATE/TIME: Thursday, February 06, 2014 AT 7:20 AM
FILENAME: J:\Victor, Town Of\208375 - General Consultation\208375.004 - Annual Update Design & Const\2014 Standrads\2014 Updates Victor D&C Standard Details\WS-3.Dgn

ENDNOTES INDICATING CHANGES

[1] 2009. Renumbered, bringing ahead Standard Conditions and Access Management Guidelines and putting Standard Details at the end. (Introduction)
[2] 2009. Add paragraph to address any potential conflicts between this document and the Town Code (Page 1-1)
[3] 2018. Resolution No. 63. Adopted 01/22/2018 (Page 1-2)
[4] 2014. Resolution No. 81. Adopted 01/27/2014 (Page 1-2)
[5] 2014. Resolution No. 81. Adopted 01/27/2014 (Page 1-2)
[6] 2018. Resolution No. Adopted 01/22/2018 (Page 1-2)
[7] 2022. Resolution No. 138-2022. Adopted 04/11/2022 (Page 1-2)
[8] 2014. Resolution No. 81. Adopted 01/27/2014 (Page 1-2)
[9] 2023. Resolution No. 287-2023. Adopted 12/18/2023. (Page 1-2)
[10] 2017. Resolution No. 222. Adopted 05/22/2017 (Page 1-2)
[11] 2017. Resolution No. 222. Adopted 05/22/2017 (Page 1-2)
[12] 2014. Resolution No. 81. Adopted 01/27/2014 (Page 1-2)
[13] 2009. Resolution No. 233. Adopted 06/22/2009 (Page 1-2)
[14] 2017. Resolution No. 222. Adopted 05/22/2017 (Page 1-3)
[15] 2014. Resolution No. 81. Adopted 01/27/2014 (Page 1-3)
[16] 2017. Resolution No. 222. Adopted 05/22/2017 (Page 1-3
[17] 2018. Resolution No. Adopted 01/22/2018 (Page 1-3)
[18] 2023. Resolution No. 287-2023. Adopted 12/18/2023 (Page 1-4)
[19] 2011. Resolution No. 143. Adopted 03/28/2011 (Page 1-4)
[20] 2014. Resolution No. 81. Adopted 01/27/2014 (Page 1-4)
[21] 2018. Resolution No. 63. Adopted 01/22/2018. (Page 1-4)
[22] 2014. Resolution No. 81. Adopted 01/27/2014 (Page 1-4)
[23] 2018. Resolution No. 63. Adopted 01/22/2018 (Page 1-5)
[24] 2014. Resolution No. 81. Adopted 01/27/2014 (Page 1-5)
[25] 2017. Resolution No. 222. Adopted 05/22/2017 (Page 1-5)
[26] 2009. Resolution No. 233. Adopted 06/22/2009 (Page 1-5)
[27] 2013. Resolution No. 115. Adopted 03/11/2013 (Page 1-5)
[28] 2013. Resolution No. 115. Adopted 03/11/2013 (Page 1-5)
[29] 2009. Resolution No. 233. Adopted 06/22/2009 (Page 1-5)
[30] 2009. Resolution No. 233. Adopted 06/22/2009 (Page 1-6)
[31] 2009. Resolution No. 233. Adopted 06/22/2009 (Page 1-6)
[32] 2017. Resolution No. 222. Adopted 05/22/2017 (Page 1-7)
[33] 2018. Resolution No. 63. Adopted 01/22/2018 (page 1-7)
[34] 2011. Resolution No. 143. Adopted 03/28/2011 (Page 1-7)
[35] 2011. Resolution No. 143. Adopted 03/28/2011 (Page 1-7)
[36] 2018. Resolution No. 63. Adopted 01/22/2018 (Page 1-7)
[37] 2013. Resolution No. 115. Adopted 03/11/2013 (Page 1-8)
[38] 2013. Resolution No. 115. Adopted 03/11/2013 (Page 1-10)
[39] 2011. Resolution No. 143. Adopted 03/28/2011 (Page 1-11)
[40] 2014. Resolution No. 81. Adopted 01/27/2014 (Page 1-12)
[41] 2014. Resolution No. 81. Adopted 01/27/2014 (Page 1-12)
[42] 2014. Resolution No. 81. Adopted 01/27/2014 (Page 1-12)
[43] 2013. Resolution No. 115. Adopted 03/11/2013 (Page 1-12)
[44] 2014. Resolution No. 81. Adopted 01/27/2014 (Page 1-14)
[45] 2017. Resolution No. 222. Adopted 05/22/2017 (Page 1-15)
[46] 2009. “Temporary” was removed from the beginning of the line to match changes in detail and reflecting the occasional “temporary” turnaround that becomes permanent (Page 1-15)
[47] 2014. Resolution No. 81. Adopted 01/27/2014 (Page 1-15)
[48] 2014. Resolution No. 81. Adopted 01/27/2014 (Page 1-16)
[49] 2018. Resolution No. 63. Adopted 01/22/2018 (Page 1-16)

ENDNOTES INDICATING CHANGES

[50] 2018. Resolution No. 63. Adopted 01/22/2018 (Page 1-16)
[51] 2014. Resolution No. 81. Adopted 01/27/2014 (Page 1-16)
[52] 2014. Resolution No. 81. Adopted 01/27/2014 (Page 1-18)
[53] 2011. Resolution No. 143. Adopted 03/28/2011 (Page 1-18)
[54] 2011. Resolution No. 143. Adopted 03/28/2011 (Page 1-18)
[55] 2013. Resolution No. 115. Adopted 03/11/2013 (Page 1-18)
[56] 2014. Resolution No. 81. Adopted 01/27/2014 (Page 1-19)
[57] 2017. Resolution No. 222. Adopted 05/22/2017 (Page 1-21)
[58] 2018. Resolution No. 63. Adopted 01/22/2018 (Page 1-21)
[59] 2014. Resolution No. 81. Adopted 01/27/2014 (Page 1-21)
[60] 2014. Resolution No. 81. Adopted 01/27/2014 (Page 1-21)
[61] 2018. Resolution No. 63. Adopted 01/22/2018 (Page 1-24)
[62] 2013. Resolution No. 115. Adopted 03/11/2013 (Page 2-2)
[63] 2022. Resolution No. 138-2022. Adopted 04/11/2022 (Page 2-2)
[64] 2014. Resolution No. 81. Adopted 01/27/2014 (Page 2-3)
[65] 2014. Resolution No. 81. Adopted 01/27/2014 (Page 2-3)
[66] 2011. Resolution No. 143. Adopted 03/28/2011 (Page 2-3)
[67] 2011. Resolution No. 143. Adopted 03/28/2011 (Page 2-3)
[68] 2011. Resolution No. 143. Adopted 03/28/2011 (Page 2-3)
[69] 2014. Resolution No. 81. Adopted 01/27/2014 (Page 2-5)
[70] 2009. Updated to reference appropriate publication (Page 2-5)
[71] 2014. Resolution No. 81. Adopted 01/27/2014 (Page 2-6)
[72] 2014. Resolution No. 81. Adopted 01/27/2014 (Page 2-7)
[73] 2011. Resolution No. 143. Adopted 03/28/2011 (Page 2-9)
[74] 2023. Resolution No. 287-2023. Adopted 12/18/2023 (Page 2-9)
[75] 2011. Resolution No. 143. Adopted 03/28/2011 (Page 2-9)
[76] 2009. Updated to reference current version of document (Page 2-11)
[77] 2012. Resolution No. 132. Adopted 03/12/12 (Page 2-12)
[78] 2012. Resolution No. 132. Adopted 03/12/12 (Page 2-12)
[79] 2011. Resolution No. 143. Adopted 03/28/2011 (Page 2-14)
[80] 2009. Spelling correction (Page 2-14)
[81] 2009. Added reference (Page 2-14)
[82] 2019. Resolution No. 385. Adopted 10/15/2019 (Pages 2-14)
[83] 2009. Update for consistency (Page 2-14)
[84] 2009. Update for consistency (Page 2-15)
[85] 2018. Resolution No. 63. Adopted 01/22/2018 (Page 2-16)
[86] 2011. Resolution No. 143. Adopted 03/28/2011 (Page 2-16)
[87] 2014. Resolution No. 81. Adopted 01/27/2014 (Page 2-16)
[88] 2014. Resolution No. 81. Adopted 01/27/2014 (Page 2-16)
[89] 2014. Resolution No. 81. Adopted 01/27/2014 (Page 2-16)
[90] 2023. Resolution No. 287-2023. Adopted 12/18/2023 (Page 2-18)
[91] 2009. Resolution No. 233. Adopted 06/22/2009 (Page 2-18)
[92] 2022. Resolution No. 138-2022. Adopted 04/11/2022 (Page 2-19)
[93] 2014. Resolution No. 81. Adopted 01/27/2014 (Page 2-19)
[94] 2022. Resolution No. 138-2022. Adopted 04/11/2022 (Page 2-20)
[95] 2014. Resolution No. 81. Adopted 01/27/2014 (Page 2-20)
[96] 2014. Resolution No. 81. Adopted 01/27/2014 (Page 2-20)
[97] 2018. Resolution No. 63. Adopted 01/22/2018 (Page 2-20)
[98] 2012. Resolution No. 132. Adopted 03/12/12 (Page 2-21)
[99] 2017. Resolution No. 222. Adopted 05/22/2017 (Page 2-21)
[100] 2014. Resolution No. 81. Adopted 01/27/2014 (Page 2-21)
[101] 2018. Resolution No. 63. Adopted 01/22/2018 (Page 2-21)
[102] 2018. Resolution No. 63. Adopted 01/22/2018 (Page 2-21)
[103] 2009. Renamed for consistency (Page 3-1)
[104] 2017. Resolution No. 222. Adopted 05/22/2017 (Page 3-1)

ENDNOTES INDICATING CHANGES

[105] 2023. Resolution No. 287-2023. Adopted 12/18/2023 (Page 3-1)
[106] 2022. Resolution No. 138-2022. Adopted 04/11/2022 (Page 3-1)
[107] 2017. Resolution No. 222. Adopted 05/22/2017 (Page 3-2)
[108] 2011. Resolution No. 143. Adopted 03/28/2011 (Page 3-3)
[109] 2014. Resolution No. 81. Adopted 01/27/2014 (Page 3-3)
[110] 2014. Resolution No. 81. Adopted 01/27/2014 (Page 3-3)
[111] 2011. Resolution No. 143. Adopted 03/28/2011 (Page 3-4)
[112] 2011. Resolution No. 143. Adopted 03/28/2011 (Page 3-4)
[113] 2013. Resolution No. 115. Adopted 03/11/2013 (Page 3-4)
[114] 2014. Resolution No. 81. Adopted 01/27/2014 (Page 3-7)
[115] 2023. Resolution No. 287-2023. Adopted 12/18/2023 (Page 3-8)
[116] 2018. Resolution No. 63. Adopted 01/22/2018 (Page 3-8)
[117] 2014. Resolution No. 81. Adopted 01/27/2014 (Page 3-8)
[118] 2014. Resolution No. 81. Adopted 01/27/2014 (Page 3-8)
[119] 2014. Resolution No. 81. Adopted 01/27/2014 (Page 3-9)
[120] 2017. Resolution No. 222. Adopted 05/22/2017 (Page 3-10)
[121] 2012. Resolution No. 132. Adopted 03/12/12 (Page 3-12)
[122] 2014. Resolution No. 81. Adopted 01/27/2014 (Page 3-12)
[123] 2013. Resolution No. 115. Adopted 03/11/2013 (Page 3-14)
[124] 2017. Resolution No.222. Adopted 05/22/2017 (Page 3-14)
[125] 2018. Resolution No. 63. Adopted 01/22/2018 (Page 3-14)
[126] 2018. Resolution No. 63. Adopted 01/22/2018 (Page 3-14)
[127] 2009. Prohibits glued joints (Page 3-14)
[128] 2022. Resolution No. 138-2022. Adopted 04/11/2022 (Page 3-15)
[129] 2022. Resolution No. 138-2022. Adopted 04/11/2022 (Page 3-15)
[130] 2022. Resolution No. 138-2022. Adopted 04/11/2022 (Page 3-15)
[131] 2018. Resolution No. 63. Adopted 01/22/2018 (Page 3-15)
[132] 2009. Prohibits glued joints (Page 3-16)
[133] 2011. Resolution No. 143. Adopted 03/28/2011 (Page 3-16)
[134] 2022. Resolution No. 138-2022. Adopted 04/11/2022 (Page 3-16)
[135] 2011. Resolution No. 143. Adopted 03/28/2011 (Page 3-16)
[136] 2022. Resolution No. 138-2022. Adopted 04/11/2022 (Page 3-16)
[137] 2022. Resolution No. 138-2022. Adopted 04/11/2022 (Page 3-17)
[138] 2012. Resolution No. 132. Adopted 03/12/12 (Page 3-17)
[139] 2014. Resolution No. 81. Adopted 01/27/2014 (Page 3-17)
[140] 2012. Resolution No. 132. Adopted 03/12/12 (Page 3-18)
[141] 2014. Resolution No. 81. Adopted 01/27/2014 (Page 3-18)
[142] 2014. Resolution No. 81. Adopted 01/27/2014 (Page 3-18)
[143] 2014. Resolution No. 81. Adopted 01/27/2014 (Page 3-18)
[144] 2009. Prohibits glued joints (Page 3-19)
[145] 2023. Resolution No. 149. Adopted 05/22/2023 (Page 3-19)
[146] 2011. Resolution No. 143. Adopted 03/28/2011 (Page 3-20)
[147] 2012. Resolution No. 132. Adopted 03/12/12 (Page 3-21)
[148] 2014. Resolution No. 81. Adopted 01/27/2014 (Page 3-21)
[149] 2014. Resolution No. 81. Adopted 01/27/2014 (Page 3-22)
[150] 2014. Resolution No. 81. Adopted 01/27/2014 (Page 3-23)
[151] 2014. Resolution No. 81. Adopted 01/27/2014 (Page 3-23)
[152] 2011. Resolution No. 143. Adopted 03/28/2011 (Page 3-23)
[153] 2022. Resolution No. 138-2022. Adopted 04/11/2022 (Page 3-24)
[154] 2014. Resolution No. 81. Adopted 01/27/2014 (Page 3-24)
[155] 2022. Resolution No. 138-2022. Adopted 04/11/2022 (Page 3-24)
[156] 2022. Resolution No. 138-2022. Adopted 04/11/2022 (Page 3-25)
[157] 2022. Resolution No. 138-2022. Adopted 04/11/2022 (Page 3-25)
[158] 2022. Resolution No. 138-2022. Adopted 04/11/2022 (Page 3-26)
[159] 2022. Resolution No. 138-2022. Adopted 04/11/2022 (Page 3-27)

ENDNOTES INDICATING CHANGES

[160] 2014. Resolution No. 81. Adopted 01/27/2014 (Page 3-27)
[161] 2018. Resolution No. 63. Adopted 01/22/2018 (Page 3-28)
[162] 2018. Resolution No. 63. Adopted 01/22/2018 (Page 3-28)
[163] 2018. Resolution No. 63. Adopted 01/22/2018 (Page 3-29)
[164] 2014. Resolution No. 81. Adopted 01/27/2014 (Page 3-29)
[165] 2014. Resolution No. 81. Adopted 01/27/2014 (Page 3-30)
[166] 2011. Resolution No. 143. Adopted 03/28/2011 (Page 3-31)
[167] 2014. Resolution No. 81. Adopted 01/27/2014 (Page 3-31)
[168] 2014. Resolution No. 81. Adopted 01/27/2014 (Page 3-32)
[169] 2022. Resolution No. 138-2022. Adopted 04/11/2022 (Page 3-33)
[170] 2011. Resolution No. 143. Adopted 03/28/2011 (Page 3-33)
[171] 2013. Resolution No. 115. Adopted 03/11/2013 (Page 3-33)
[172] 2023. Resolution No. 149. Adopted 05/22/2023 (Page 3-34)
[173] 2018. Resolution No. 63. Adopted 01/22/2018 (Page 3-34)
[174] 2014. Resolution No. 81. Adopted 01/27/2014 (Page 3-34)
[175] 2023. Resolution No. 287-2023. Adopted 12/18/2023 (Page 3-35)
[176] 2018. Resolution No. 63. Adopted 01/22/2018 (Page 3-35)
[177] 2018. Resolution No. 63. Adopted 01/22/2018 (Page 3-35)
[178] 2014. Resolution No. 81. Adopted 01/27/2014 (Page 3-35)
[179] 2023. Resolution No. 149. Adopted 05/22/2023 (Page 3-35)
[180] 2023. Resolution No. 287-2023. Adopted 12/18/2023 (Page 3-35)
[181] 2011. Resolution No. 143. Adopted 03/28/2011 (Page 3-35)
[182] 2014. Resolution No. 81. Adopted 01/27/2014 (Page 3-35)
[183] 2011. Resolution No. 143. Adopted 03/28/2011 (Page 3-36)
[184] 2009. Require underdrain under all conditions (Page 3-38)
[185] 2022. Resolution No. 138-2022. Adopted 04/11/2022 (Page 3-39)
[186] 2018. Resolution No. 63. Adopted 01/22/2018 (Page 3-39)
[187] 2011. Resolution No. 143. Adopted 03/28/2011 (Page 3-39)
[188] 2014. Resolution No. 81. Adopted 01/27/2014 (Page 3-39)
[189] 2023. Resolution No. 287-2023. Adopted 12/18/2023 (Page 3-39)
[190] 2011. Resolution No. 143. Adopted 03/28/2011 (Page 3-39)
[191] 2018. Resolution No. 63. Adopted 01/22/2018 (Page 3-39)
[192] 2011. Resolution No. 143. Adopted 03/28/2011 (Page 3-39)
[193] 2023. Resolution No. 287-2023. Adopted 12/18/2023 (Page 3-39)
[194] 2009. Require underdrain instead of crushed stone weep. Revised 2012. Resolution No. 132. Adopted 03/12/12 (Page 3-40)
[195] 2023. Resolution No. 287-2023. Adopted 12/18/2023 (Page 3-41)
[196] 2014. Resolution No. 81. Adopted 01/27/2014 (Page 3-41)
[197] 2014. Resolution No. 81. Adopted 01/27/2014 (Page 3-42)
[198] 2009. Eliminated stamped concrete detectable warning systems (Page 3-42)
[199] 2009. Temporary street signs (Page 3-42)
[200] 2009. Centralizing purchase of markers (Page 3-43)
[201] 2017. Resolution No.222. Adopted 05/22/2017 (Page 3-43)
[202] 2014. Resolution No. 81. Adopted 01/27/2014 (Page 3-43)
[203] 2009. Reference for trenchless installation of casing (Page 3-44)
[204] 2013. Resolution No. 115. Adopted 03/11/2013 (Page 4-1)
[205] 2012. Resolution No. 132. Adopted 03/12/12 (Page 4-1)
[206] 2011. Resolution No. 143. Adopted 03/28/2011 (Page 4-1)
[207] 2013. Resolution No. 115. Adopted 03/11/2013 (Page 4-1)
[208] 2014. Resolution No. 81. Adopted 01/27/2014 (Page 4-1)
[209] 2014. Resolution No. 81. Adopted 01/27/2014 (Page 4-2)
[210] 2023. Resolution No. 287-2023. Adopted 12/18/2023 (Page 4-2)
[211] 2023. Resolution No. 287-2023. Adopted 12/18/2023 (Page 4-2)
[212] 2023. Resolution No. 287-2023. Adopted 12/18/2023 (Page 4-2)
[213] 2013. Resolution No. 115. Adopted 03/11/2013 (Page 4-3)

ENDNOTES INDICATING CHANGES

[214] 2009. Resolution No. 420. Adopted 11/23/2009 (Page 4-3)
[215] 2023. Resolution No.149. Adopted 05/22/2023 (Page 4-3)
[216] 2009. Updates based on newer Local Law (Page 4-3). Revised by 2012. Resolution No. 132. Adopted 03/12/12 (Page 4-5)
[217] 2014. Resolution No. 81. Adopted 01/27/2014 (Page 4-5)
[218] 2009. Updated based on newer Local Law adopted (Page 4-5)
[219] 2013. Resolution No. 115. Adopted 03/11/2013 (Page 4-5)
[220] 2013. Resolution No. 115. Adopted 03/11/2013 (Page 4-5)
[221] 2014. Resolution No. 81. Adopted 01/27/2014 (Page 4-5)
[222] 2013. Resolution No. 115. Adopted 03/11/2013 (Page 4-6)
[223] 2023. Resolution No. 149. Adopted 05/22/2023 (Page 4-6)
[224] 2011. Resolution No. 143. Adopted 03/28/2011 (Page 4-6)
[225] 2014. Resolution No. 81. Adopted 01/27/2014 (Page 4-6)
[226] 2013. Resolution No. 115. Adopted 03/11/2013 (Page 4-7)
[227] 2009. Clarification regarding pavement requirements (Page 4-7)
[228] 2009. Clarification regarding visual buffer (Page 4-7)
[229] 2009. Updates based on newer Local Law. Revised by 2012. Resolution No. 132. Adopted 03/12/12 (Page 4-7)
[230] 2023. Resolution No. 149. Adopted 05/22/2023 (Page 6-1)
[231] 2023. Resolution No. 287-2023. Adopted 12/18/2023 (Page 6-1)
[232] 2022. Resolution No. 138-2022. Adopted 04/11/2022 (Page 6-1)
[233] 2022. Resolution No. 138-2022. Adopted 04/11/2022 (Page 6-1)
[234] 2022. Resolution No. 138-2022. Adopted 04/11/2022 (Page 6-1)
[235] 2022. Resolution No. 138-2022. Adopted 04/11/2022 (Page 6-1)
[236] 2022. Resolution No. 138-2022. Adopted 04/11/2022 (Page 6-1)
[237] 2022. Resolution No. 138-2022. Adopted 04/11/2022 (Page 6-1)
[238] 2022. Resolution No. 138-2022. Adopted 04/11/2022 (Page 6-1)
[239] 2023. Resolution No. 149. Adopted 05/22/2023 (Page 6-1)
[240] 2023. Resolution No. 149. Adopted 05/22/2023 (Page 6-1)
[241] 2023. Resolution No. 149. Adopted 05/22/2023 (Page 6-2)
[242] 2023. Resolution No. 149. Adopted 05/22/2023 (Page 6-2)
[243] 2014. Resolution No. 81. Adopted 01/27/2014 (Page 6-2)
[244] 2013. Resolution No. 115. Adopted 03/11/2013 (Page 6-2)

APPENDIX A

NATIVE PLANT MANUAL A-1

Chokeberry, Fall; thetreecenter.com

Winterberry; carolynshadegarden.com

TOWN OF VICTOR NEW YORK

Native Plant Manual

Hickory Tree; treepicturesonline.com

Service Berry, 20minutegarden.com

Americanmeadows.com

1st Edition:
2010, James P. Engel, White Oak Nursery
Using Native Plants in Commercial, Suburban, and Urban Landscapes:
Incorporating Ecological Design Principles
Photos from J. Engel

2nd Edition:
2018, Town of Victor Conservation Board
Contributions from Zaretsky & Associates, Inc.
Town of Victor, Native Plant Manual
Photos from online resources, CB files

Town of Victor
Native Plant Manual

This manual was developed by the Town of Victor Conservation Board to be used as a guide for the selection and use of native plants in commercial and public landscapes.

Please Note: The Town of Victor Conservation Board advises all developers, contractors and landscapers undertaking commercial work within the town to **use at least 70% native species in all plantings** (see Tables 1, 2 and 3). Select the remaining 30% of the plant material from the list of acceptable non-native species (see Table 4). Do not use plants from the list of unacceptable species (see Table 5). Also, consult the DEC website for regulated and prohibited invasive species to avoid. **Meet the 70% requirement within each category of plant**: shade trees, conifers, shrubs, perennials and ornamental grasses. Each category of plant must meet the 70% requirement independently of the other categories. Annual flowers are exempt from the requirement.

Reference: http://www.victorny.org; search Town Code for subsection 211-45 Native Plant requirements

This manual provides practical tree, shrub, perennial and grass choices for a variety of situations that may arise in developing a site or when managing and updating a current landscape. Choosing the right plant for the site often results in lower maintenance costs, and a well-planned landscape plan can add value to the development. By selecting the proper plants for the location, many long-term issues can be avoided.

Consideration should be given to the mature size of the tree, shrub or perennial and how long it takes to achieve mature height and width. A plant that is too big for the location requires constant pruning and/or shearing and may need to be replaced after several years. Because native plants are adapted to local environmental conditions, they require far less water, saving time, money and an extremely valuable natural resource. In addition to providing vital habitat for birds, many other species of wildlife benefit as well. Using the proper plants in rain gardens, wetlands mitigation, meadows, etc. helps to avoid plant failure. In addition, by using the proper plants for meadows, you can avoid large swaths of lawn, which require weekly mowing.

Table of Contents

About the Native Plant Manual 6
Native Plant Definition 6
Reasons to Use Native Plants in Our Landscapes 6
Conserve Local Natural Resources 7
Availability of Native Plants 7
Conserve Existing Native Vegetation 8
Key Descriptions for Tables 1 a & b, 2 a & b and 3 a & b 9
Table 1a: Native Deciduous Trees for Use in Landscape Plantings 10
Table 1b: Native Conifers for Use in Landscape Plantings 14
Table 2a: Native Shrubs for Use in Landscape Plantings 15
Table 2b: Native Small Trees for Use in Landscape Plantings 21
Table 3a: Native Wildflowers for Use in Landscape Plantings 23
Table 3b: Native Grasses for Use in Landscape Plantings 29
Table 4: Non-Native Trees Shrubs and Wildflowers 31
Avoid the Problem of Invasive Plants 38
Terrestrial Invasive Species in New York State 39
Table 5: Non-native Trees, Shrubs, Wildflowers and Grasses Considered Invasive and should never be used in Landscape Plantings 40
Environmental Benefits of Plants 43
Plant Survival 44
Plant Small 44
Create Three-dimensional Landscapes 45

New Ways to Use Trees in the Landscape 45
Combine Plants of Different Heights and Growth Habits 46
Replace Lawn with Meadow 46
Table 6: Native Wildflowers, Grasses and Shrubs for Use in a Meadow Planting 48
Plants for Water Control Structures 49
Rain gardens – An Effective Alternative to Managing Stormwater 49
Table 7: Native Wetland Plants and Shrubs for Use in Managing Storm Water Runoff 51
The Right Plant for an Impossible Site 52
Table 8: Durable Plants for Extreme Environments 52
Biodiversity and Pest Control 54
Conclusion 55

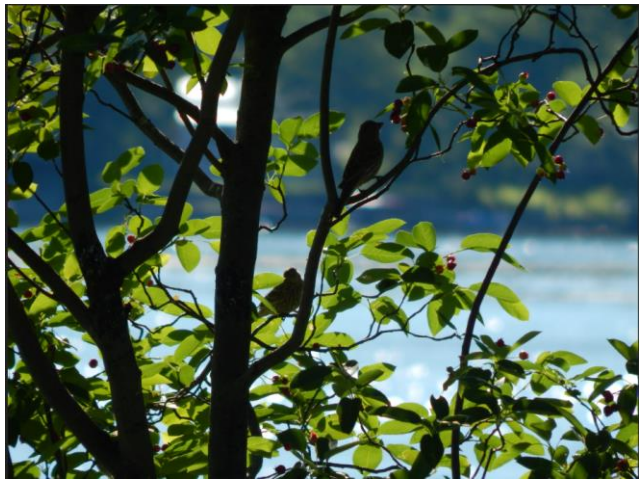

Photographer: Kate Crowley

About the Native Plant Manual

The manual has been formatted to be friendly to residents and developers who are not arborists. Plant names have been formatted so that the genus is listed first (Maple), followed by the species (Red), and then the variety (Acer rubrum var. drummondi).

Plant availability is clearly noted through the use of color. **Commonly available plants are green**, **moderately available are blue**, **plants that are uncommon in garden centers are written in red,** **and rare plants are presented in black**. For additional information regarding availability and planning see Availability of Native Plants.

(Return to Table Of Contents)

Native Plant Definition

The term "native plant" as used in this document refers to *any species of indigenous plant that existed east of the Mississippi river prior to European settlement.* Note: This definition excludes introduced plants that have become widely naturalized since European colonization. Cultivated varieties (cultivars) of native plants are acceptable to use interchangeably with the species; however, selective breeding for ornamental traits can produce plants that are less adapted to survive in the landscape, compared to the species. Plant the species unless there is a specific reason for using a cultivar.

(Return to Table Of Contents)

Reasons to Use Native Plants in Our Landscapes

Native plants are indigenous to our area; they are adapted to local climatic conditions and soils; and they have evolved over thousands of years to survive and reproduce in this region. Native plants grow naturally in the surrounding natural landscape and grow just as well in manmade managed landscapes.

Because native plants are an integral component of the local ecosystem, they pose no inherent environmental or ecological risk to the health of the ecosystem in contrast to non-native plants. Native plants form the base of the food chain for the local ecosystem and provide the critical requirements that wildlife species need to live and reproduce.

(Return to Table Of Contents)

Conserve Local Natural Resources

The Town of Victor believes that conservation of local natural resources serves the public good. The town is experiencing rapid development with the resulting loss of open spaces, loss of wildlife habitat and an increase in invasive species. These changes lead to deteriorating environmental quality. Many of these natural resource issues are addressed in part by promoting the use of native plants and applying a best-practices approach to landscapes within the town.

(Return to Table Of Contents)

Maple Tree; arboretum.ua.edu

Availability of Native Plants

As noted earlier, this manual is formatted to help you in the planning process. In Tables 1, 2 and 3 trees, shrubs, perennials and grasses are categorized as rare, common, etc. to alert you to plants that may require longer lead times or are only available from specialty nurseries. The left-most column of each table indicates availability of the plant.

Contact prospective suppliers and growers early in the design process to make sure you have the plants you need for your project. Plan ahead to locate sources and assure availability because native plants may not be available from your regular suppliers in the quantities, species and sizes needed for your project. Work with local growers if possible. If you contact growers early enough in the process they can custom grow plants in the numbers and species you need. They will be eager to work with you, knowing that they have a specific buyer and market for their plants.

(Return to Table Of Contents)

Conserve Existing Native Vegetation

Protect native plants and intact native plant communities where they already exist in the landscape. Conserving existing habitat is better for the environment and is more economical than having to replant.

Take specific precautions to protect plants and their habitat during construction and site development:

- Reduce the building and paving footprints whenever possible.
- Limit site disturbance to a minimal area around the building perimeter. Cordon off areas to be preserved intact with fencing to prevent unwanted vehicle traffic and unintentional use.
- Trees to be saved should be surrounded with fencing at a minimum to the drip line of the canopy, protecting the root system and soil from compaction by heavy equipment.
- Restrict where construction equipment, building materials, temporary buildings and other building supplies are parked, stored or warehoused. Areas that will be permanently disturbed, such as parking lots, are the preferred location.

(Return to Table Of Contents)

Honey Locust; wikipedia.org

Key Descriptions for Tables 1 a & b, 2 a & b and 3 a & b

Availability: This is how likely it is that the plant will be found at a wholesale or retail nursery.

Common: Indicates a common landscape plant; it will be easy to locate this plant in the nursery trade.

Moderate: This is a less common plant in the nursery trade. Some nurseries will grow this plant.

Uncommon: This plant will be difficult to locate. It may be found at a specialty nursery or be available by pre-ordering. It may take some hunting to locate this plant.

Rare: This plant will be very difficult to locate in the nursery trade. This type of plant is seldom grown for ornamental purposes. It might be possible to locate this plant from a nursery doing wild land restoration.

Value: The first letter (H, M, or L) indicates the ranking placed on using this plant in the landscape. Plants with higher ratings should be given priority for use. The rating is based on a number of factors: ability to survive in adverse soils and varied environmental conditions, importance to wildlife and desirable ornamental characteristics.

Type: A cultivar is a plant variety produced in cultivation by selective breeding. When only "species" is listed there are no known or readily available cultivars offered. When "species & cultivar" is listed, the species or any of the cultivar may be used. The term "many cultivars" indicates that there are numerous cultivars on the market and a cultivar should be used over the species.

Zone: The range of climatic zones this plant is known to grow in. Use this as a guide for selecting plants that are adapted to our climatic zone.

Height range: The average mature height (often a range) for the species. This can vary significantly depending on age of the plant, growing conditions, maintenance pruning, cultivar and other factors. Use as a rough guide when selecting plants for height.

Drought tolerance: Range is from high to low. A range may indicate other contributing factors, such as plants that are more drought tolerant in shade, ability to withstand short-term drought or drought tolerance once established.

Moisture: The range of soil moistures each plant will tolerate. Range is from very dry to wet saturated soils. Most plants can grow in a range of soil moistures. The larger the moisture range the more tolerant the plant will be to soil moisture variables.

Soil: The general type of soil that the plant commonly grows in. Range is from sandy to clay.

Light requirements: The range of sunlight conditions the plant will tolerate.

(Return to Table Of Contents)

Table 1a: Native Deciduous Trees for Use in Landscape Plantings

Availability	Value	Common Name	Latin Name	Type	Zone	Height Range	Drought Tolerance	Moisture	Soil	Light Requirements	Notes
Medium	M/ Adapt	Ash, American	Fraxinus americana	species & cultivars	4 - 8	50 - 80’	Low-Mod	D, M, Mo	WD, L, C	S, PS	Avoid until Ash borer issue is solved
Common	M/ Adapt	Ash, Green	Fraxinus pennsylvanica	species & cultivars	3 - 8	50 - 60’	High	VD, M, Mo, W	PD/ L, C	S, PS	Avoid until Ash borer issue is solved
Rare	M/ Orn, Wild	Beech, American	Fagus grandifolia	Species	4 - 8	50 - 70’	Low-Mod	M, Mo	WD/ Loam	S, PS, PSh, Sh	Not tolerant of wet sites
Medium	M/ Orn, Wild	Birch, Gray	Betula populifolia	species & cultivars	3 - 7	20 - 30’	Mod	D, M, Mo	WD/ L, G	S, PS	Good for wet sites/rain gardens; good for naturalizing
Medium	H/ Orn, Wild	Birch, Paper	Betula papyrifera	Species	3 - 6	50 - 70’	Low-Mod	M, Mo	WD/ L, G	S, PS, PSh	
Common	H/ Orn, Adapt, Wild	Birch, River	Betula nigra	species & cultivars	3 - 8	40 - 70’	Mod-High	D, M, Mo, W	PD/ L, C	S, PS	Good for wet sites/use Heritage for white bark; tough urban tree
Uncommon	M/ Orn, Adapt, Wild	Birch, Sweet	Betula lenta	Species	4 - 7	40 - 55’	Mod	D, M, Mo	WD/ L, G	S, PS, PSh	
Rare	M/ Orn, Wild	Birch, Yellow	Betula alleghaniensis	Species	3 - 7	60 - 75’	Mod	M, Mo	PD/ S, L	S, PS, PSh	
Uncommon	M/ Orn, Wild	Buckeye, Ohio	Aesculus glabra	Species	4 - 7	30 - 70’	Low	M, Mo, W	WD/ S, L, C	S, PS	Good for rain gardens
Uncommon	M/ Orn, Wild	Buckeye, Yellow	Aesculus flava	Species	4 - 8	60 - 75’	Mod	M, Mo	WD/ S, L, C	S, PS	
Rare	M/ Adapt, Wild	Cherry, Black	Prunus serotina	Species	3 - 8	60 - 70’	Mod	M, Mo	WD/ Loam	S, PS, PSh	
Uncommon	M/ Orn, Adapt	Coffee Tree, Kentucky	Gymnocladus dioicus	Species	3 - 8	60 - 75’	High	VD, M, Mo	WD, L, C	S, PS	
Rare	L/ Orn	Cypress, Bald	Taxodium distichum	Species	4 - 9	50 - 70’	Mod-High	D, M, Mo, W	PD/ L, C	S, PS, PSh	
Medium	M/ Orn, Adapt	Elm, American	Ulmus americana	cultivars only	3 - 9	60 - 80’	Low-Mod	D, M, Mo, W	PD/ L, C	S, PS	Use newer varieties only: Princeton, Valley Forge, etc

Value: H = High; M = Medium; L = Low; ADAPTable; ORNamental; WILDlife

Moisture: WD = Well drained; VD = Very dry; D = Dry; M = Medium; Mo = Moist; W = Wet

Soils: S = Sand; L = Loam; C = Clay; G = Gravel

Light Requirement: S = Full sun; PS= Partial sun; PSh = Partial shade; Sh = Full shade

Table 1a: Native Deciduous Trees for Use in Landscape Plantings (cont'd)

Availability	Value	Common Name	Latin Name	Type	Zone	Height Range	Drought Tolerance	Moisture	Soil	Light Requirements	Notes
Uncommon	**H/ Orn, Adapt, Wild**	**Gum, Black**	**Nyssa sylvatica**	**Species**	**4 - 8**	**30 - 50'**	**Mod-High**	**D, M, Mo, W**	**PD/ L, C**	**S, PS, PSh**	**Tolerates wet sites; outstanding red fall color; slow-growing**
Uncommon	**M/ Orn, Adapt**	**Gum, Sweet**	**Liquidambar styraciflua**	**Species**	**5 - 8**	**60 - 75'**	**Mod**	**D, M, Mo, W**	**PD/ L, C**	**S, PS**	**Beautiful fall color; drops seeds; do not use in parking lots**
Uncommon	**M/ Adapt, Wild**	**Hackberry**	**Celtis occidentalis**	**Species**	**3 - 8**	**40 - 60'**	**High**	**VD, M, Mo**	**WD, L, C**	**S, PS**	
Rare	M/ Orn, Adapt, Wild	Hickory, Bitternut	Carya cordiformis	Species	4 - 8	50 - 75'	High	D, M, Mo	WD/ L, C	S, PS	
Rare	M/ Adapt, Wild	Hickory, Shagbark	Carya ovata	Species	4 - 8	60 - 80'	High	D, M, Mo	WD/ L, C	S, PS	
Uncommon	**H/ Orn, Adapt**	**Hophornbeam**	**Ostrya virginiana**	**Species**	**3 - 8**	**25 - 40'**	**Mod-High**	**D, M, Mo**	**WD/ L, G**	**S, PS, PSh, Sh**	
Uncommon	**H/ Orn, Wild**	**Hornbeam, American**	**Carpinus caroliniana**	**Species**	**3 - 8**	**20 - 30'**	**Mod**	**M, Mo, W**	**PD/ L, C**	**S, PS, PSh, Sh**	**Good street tree; holds leaves late into winter**
Uncommon	**M/ Orn, Adapt**	**Linden, American**	**Tilia americana**	**Species**	**3 - 8**	**60 - 80'**	**Mod**	**M, Mo**	**PD/ L, C**	**S, PS, PSh**	**Good urban tree; varieties: American, Little Leaf, Greenspire**
Common	**M/ Orn, Adapt**	**Locust, Honey**	**Gleditsia triocanthus inermis**	**cultivars only**	**4 - 8**	**30 - 70'**	**High**	**VD, M, Mo**	**WD/ L, C, G**	**S, PS**	**Many varieties available; tough urban tree; leaves are small so leaf drop does not pose a maintenance issue**
Uncommon	**M/ Orn, Wild**	**Magnolia, Cucumber**	**Magnolia acuminata**	**Species**	**4 - 8**	**50 - 80'**	**Low-Mod**	**M, Mo**	**WD/ Loam**	**S, PS, PSh**	
Uncommon	**H/ Orn, Adapt**	**Maple, Black**	**Acer nigrum**	**Species**	**4 - 8**	**60 - 75'**	**Mod-High**	**D, M, Mo**	**WD/ L, C, G**	**S, PS, PSh, Sh**	

Value: H = High; M = Medium; L = Low; ADAPTable; ORNamental; WILDlife

Soils: S = Sand; L = Loam; C = Clay; G = Gravel

Moisture: WD = Well drained; VD = Very dry; D = Dry; M = Medium; Mo = Moist; W = Wet

Light Requirement: S = Full sun; PS= Partial sun; PSh = Partial shade; Sh = Full shade

Table 1a: Native Deciduous Trees for Use in Landscape Plantings (cont'd)

Availability	Value	Common Name	Latin Name	Type	Zone	Height Range	Drought Tolerance	Moisture	Soil	Light Requirements	Notes
Medium	H/ Orn, Adapt	Maple, Freeman	Acer x fremanii	all cultivars	4 - 8	50 - 75’	Low-Mod	D, M, Mo, W	PD/ L, C	S, PS, PSh	Cross between Silver Maple & Red Maple; good urban tree; beautiful red fall color
Common	H/ Orn, Adapt	Maple, Red	Acer rubrum	sp. & cultivars	3 - 9	40 - 60’	Low	D, M, Mo, W	PD/ L, C	S, PS, PSh	Consider Armstrong for a tall narrow street tree: 15' wide; red fall color
Common	L/ Adapt	Maple, Silver	Acer saccharinum	Species	3 - 9	50 - 70’	Mod	D, M, Mo, W	PD/ L, C	S, PS	
Common	H/ Orn, Adapt	Maple, Sugar	Acer saccharum	species & cultivars	4 - 8	60 - 75’	Low	M, Mo	WD/ L, C	S, PS, PSh, Sh	Beautiful orange/yellow/red fall color
Rare	L/ Adapt, Wild	Mulberry, Red	Morus rubra	Species	5 - 8	30 - 50’	Mod	M, Mo	WD/ Loam	S, PS, PSh	
Uncommon	M/ Adapt, Wild	Oak, Black	Quercus velutina	Species	3 - 8	50 - 60’	Mod-High	D, M, Mo	WD/ L, G	S, PS	
Uncommon	M/ Adapt, Wild	Oak, Burr	Quercus macrocarpa	Species	3 - 8	70 - 80’	High	D, M, Mo, W	PD/ L, C	S, PS	
Uncommon	M/ Adapt, Wild	Oak, Chinkapin	Quercus muehlenbergii	Species	5 - 7	60 - 70’	High	D, M, Mo	WD/ S, L, C	S, PS	
Common	H/ Orn, Adapt, Wild	Oak, Pin	Quercus palustris	Species	4 - 8	60 - 70’	Mod-High	D, M, Mo, W	PD/ L, C	S, PS	
Common	H/ Orn, Adapt, Wild	Oak, Red	Quercus rubra	Species	3 - 7	60 - 75’	Mod-High	D, M, Mo	PD/ L, C, G	S, PS, PSh	
Medium	H/ Orn, Adapt, Wild	Oak, Scarlet	Quercus coccinea	Species	4 - 8	60 - 70’	Mod-High	D, M, Mo	WD/ L, G	S, PS	
Uncommon	M/ Adapt, Wild	Oak, Shingle	Quercus imbricaria	Species	4 - 8	50 - 60’	Mod-High	D, M, Mo	WD/ L, G	S, PS	
Medium	H/ Orn, Adapt, Wild	Oak, Swamp White	Quercus bicolor	Species	4 - 8	50 - 60’	Mod-High	D, M, Mo	PD/ Loam	S, PS	
Uncommon	M/ Adapt, Wild	Oak, White	Quercus alba	Species	3 - 8	50 - 80’	Mod-High	D, M, Mo	WD/ L, G	S, PS	

Value: H = High; M = Medium; L = Low; ADAPTable; ORNamental; WILDlife

Moisture: WD = Well drained; VD = Very dry; D = Dry; M = Medium; Mo = Moist; W = Wet

Soils: S = Sand; L = Loam; C = Clay; G = Gravel

Light Requirement: S = Full sun; PS= Partial sun; PSh = Partial shade; Sh = Full shade

Table 1a: Native Deciduous Trees for Use in Landscape Plantings (cont'd)

Availability	Value	Common Name	Latin Name	Type	Zone	Height Range	Drought Tolerance	Moisture	Soil	Light Requirements	Notes
Rare	L/ Adapt, Wild	Persimmon	Diospyros virginiana	Species	4 - 8	35 - 60’	Mod	D, M, Mo	WD/ S, L, C	S, PS, PSh	
Rare	L/ Adapt, Wild	Sassafras	Sassafras albidum	Species	4 - 8	30 - 60’	Mod-High	D, M, Mo	WD/ L, G	S, PS, PSh	
Rare	M/ Orn	Silverbell, Mt	Helesia monticola	species & cultivars	4 - 8	30 - 40’	Low-Mod	M, Mo	WD/ Loam	S, PS, PSh	
Rare	M/ Orn	Silverbell, Two-winged	Helesia diptera	Species	4 - 8	20 - 30'	Low-Mod	M, Mo	WD/Loam	S, PS, PSh	
Uncommon	**M/ Orn**	**Sour Wood**	**Oxydendrum arboretum**	**Species**	**5 - 8**	**25 - 30’**	**Mod**	**M, Mo**	**WD/ L, G**	**S, PS, PSh**	**Not tolerant of urban pollution**
Medium	**H/ Orn, Adapt, Wild**	**Sycamore, American**	**Platanus occidentalis**	**Species**	**4 - 8**	**75 - 100’**	**Mod**	**D, M, Mo, W**	**PD/ L, C**	**S, PS**	
Medium	**M/ Orn**	**Tulip Tree**	**Liriodendron tulipifera**	**Species**	**4 - 8**	**70 - 90’**	**Low-Mod**	**M, Mo**	**WD/ Loam**	**S, PS**	
Uncommon	**H/ Orn**	**Yellow wood**	**Cladrastis lutea**	**species & cultivars**	**4 - 8**	**30 - 50’**	**Low-Mod**	**M, Mo**	**WD/ Loam**	**S, PS**	**Fragrant flowers**

Value: H = High; M = Medium; L = Low; ADAPTable; ORNamental; WILDlife

Soils: S = Sand; L = Loam; C = Clay; G = Gravel

Moisture: WD = Well drained; VD = Very dry; D = Dry; M = Medium; Mo = Moist; W = Wet

Light Requirement: S = Full sun; PS= Partial sun; PSh = Partial shade; Sh = Full shade

Concolor Fir; taitstrees.net

Red Pine; olddairybarn.com

Balsam Fir; wewegombel.me

Table 1b: Native Conifers for Use in Landscape Plantings

Availability	Value	Common Name	Latin Name	Type	Zone	Height Range	Drought Tolerance	Moisture	Soil	Light Requirements	Notes
Medium	M/ Orn, Wild	Fir, Balsam	Abies balsamea	Species	3 - 5	30 - 50’	Low-Mod	M, Mo	WD/ S, L, G	S, PS	
Uncommon	H/ Orn, Adapt	Fir, Canaan	Abies balsamea var. phanerolepis	Species	3 - 5	30 - 50’	Mod	M, Mo	WD/ S, L, G	S, PS	
Common	H/ Orn, Adapt	Fir, Concolor	Abies concolor	Species	3 - 7	30 - 50’	Mod-High	D, M, Mo	WD/ S, L, G	S	
Common	M/ Orn, Adapt	Fir, Douglas	Pseudotsuga menziesii	Species	4 - 6	40 - 60’	Mod	M, Mo	WD/ S, L	S, PS	Suffers from Needlecast; not advised for use in tree lines, screening, or open areas
Medium	M/ Orn	Fir, Fraser	Abies fraseri	Species	4 - 7	30 - 40’	Mod	M, Mo	WD/ S, L	S, PS	
Common	H/ Orn, Wild	Hemlock, Eastern	Tsuga canadensis	species	3 - 7	60 - 70’	Low-Mod	M, Mo	WD/ S, L, G	S, PS, PSh, Sh	Hemlock Woolly Adelgid
Uncommon	M/ Orn, Adapt	Pine, Mexican Border	Pinus strobiformis	species	4 - 8	40 - 50’	High	D, M	WD/ S, L, G	S, PS	
Uncommon	M/ Adapt	Pine, Red	Pinus resinosa	species	2 - 5	50 - 60’	High	D, M	WD/ S, L, G	S, PS	
Common	H/ Orn, Adapt, Wild	Pine, White	Pinus strobus	species	3 - 7	60 - 80’	Mod	D, M, Mo	WD/ S, L, C	S, PS, PSh	
Common	H/ Orn, Adapt	Spruce, Blue	Picea pungens	species	2 - 7	30 - 60’	Mod-High	D, M, Mo	WD/ S, L, G	S	Suffers from Needlecast; not advised for use in tree lines, screening, or open areas
Medium	H/ Orn, Adapt	Spruce, White	Picea gluaca	species	2 - 6	30 - 60’	Mod	D, M, Mo	WD/ S, L, G	S, PS, PSh	

Value: H = High; M = Medium; L = Low; ADAPTable; ORNamental; WILDlife

Moisture: WD = Well drained; VD = Very dry; D = Dry; M = Medium; Mo = Moist; W = Wet

Soils: S = Sand; L = Loam; C = Clay; G = Gravel

Light Requirement: S = Full sun; PS= Partial sun; PSh = Partial shade; Sh = Full shade

Table 2a: Native Shrubs for Use in Landscape Plantings

Availability	Value	Common Name	Latin Name	Type	Zone	Height Range	Drought Tolerance	Moisture	Soil	Light Required	Notes
		Azalea, Swamp	Rhododendron Viscosum		4 - 9	4 - 6'	Low	M		PSh, Sh	Fragrant, attracts bees & butterflies; salt tolerant
Uncommon	**M/ Adapt, Wild**	**Bayberry**	**Myrica pennsylvanica**	**Species**	**3 - 6**	**6 - 8'**	**High**	**VD, M, Mo, W**	**S, L, C**	**S, PS, PSh**	**Semi-evergreen; tough plant**
Moderate	**H/ Orn, Adapt**	**Bear Berry**	**Arctostaphylos uva-ursi**	**Species**	**2 - 6**	**< 1'**	**High**	**D, M, WD**	**S, L, G**	**S, PS**	**Good low ground cover; likes dry conditions**
Common	**H/ Orn, Wild**	**Blueberry, Highbush**	**Vaccinium corymbosum**	**many cultivars**	**3 - 7**	**6 - 8'**	**Mod-High**	**D, M, Mo**	**S, L**	**S, PS. PSh,**	**Attracts bees & butterflies**
Uncommon	**M/ Orn, Wild**	**Button Bush**	**Cephalanthus occidentalis**	**Species**	**5 - 9**	**6 - 9'**	**Low**	**Mo, W**	**L, C**	**S, PS**	**Attracts bees & butterflies**
Common	**M/ Adapt, Wild**	**Cedar, Eastern Red**	**Juniperus virginiana**	**many cultivars " Bar harbor, Bluechip**	**3 - 9**	**to 30'**	**High**	**D, M, Mo**	**S, L, G**	**S, PS**	**Beautiful bark on older specimens; many varieties both upright & low; good for birds**
Common	**H/ Orn, Adapt, Wild**	**Chokeberry, Black**	**Aronia melanocarpa**	**species, cultivars**	**3 - 8**	**3 – 5 '**	**Mod-High**	**D, M, Mo, W**	**S, L, C, G**	**S, PS**	**Good for naturalizing**
Common	**H/ Orn, Adapt, Wild**	**Chokeberry, Red**	**Aronia arbutifolia**	**species, cultivar**	**4 - 9**	**4 – 6'**	**Mod-High**	**D, M, Mo, W**	**S, L, C, G**	**S, PS**	**Good for naturalizing**
Rare	L/ Wild	Coral berry	Symphoricarpos orbiculatus	Species	3 - 7	3 - 4'	High	D, M, Mo	S, L, G	S, PS. PSh,	
Common	**M/ Adapt, Wild**	**Cranberrybush, American**	**Viburnum trilobum**	**species, cultivars**	**2 - 7**	**6 – 10'**	**Mod-High**	**M, Mo, W**	**L, C**	**S, PS. PSh,**	
Uncommon	**L/Adapt, Wild**	**Currant, Clove**	**Ribes odoratum**	**Species**	**4 - 6**	**3 - 6'**	**Mod**	**D, M, Mo**	**S, L, G**	**S, PS. PSh**	

Value: H = High; M = Medium; L = Low; ADAPTable; ORNamental; WILDlife

Moisture: WD = Well drained; VD = Very dry; D = Dry; M = Medium; Mo = Moist; W = Wet

Soils: S = Sand; L = Loam; C = Clay; G = Gravel

Light Requirement: S = Full sun; PS= Partial sun; PSh = Partial shade; Sh = Full shade

Table 2a: Native Shrubs for Use in Landscape Plantings (cont'd)

Availability	Value	Common Name	Latin Name	Type	Zone	Height Range	Drought Tolerance	Moisture	Soil	Light Required	Notes
Uncommon	L/Adapt, Wild	Currant, Eastern Black	Ribes americanum	Species	4 - 6	3 - 6’	Mod	D, M, Mo	S, L, G	S, PS. PSh	
Uncommon	M/ Adapt, Wild	Dogwood, Grey	Cornus racemosa	Species	3 - 8	5 - 8’	High	VD, M, Mo, W	All	S, PS, PSh	Good for naturalizing
Common	M/ Adapt, Wild	Dogwood, Red-twig	Cornus sericea	species, cultivars	2 - 7	5 - 8’	High	D, M, Mo, W	L, C	S, PS, PSh	
Uncommon	M/ Adapt, Wild	Dogwood, Silky	Cornus amomum	Species	4 - 8	5 - 8’	Mod	M, Mo, W	L, C	S, PS, PSh	
Uncommon	M/ Adapt, Wild	Elderberry, Black	Sambucus Canadensis	Species	4 - 9	6 - 8’	High	D, M, Mo, W	S, L, C, G	S, PS. PSh	
Rare	M/ Adapt, Wild	Elderberry, Red	Sambucus racemosa	Species	4 - 6	6 - 8’	Mod-High	D, M, Mo	S, L, G	PS. PSh, Sh	Good for naturalizing
Uncommon	L/ Orn	Fetterbush	Leucothoe fontanesiana	species, cultivars	5 - 8	4 - 5’	Low-Mod	M, Mo	S, L	PS. PSh	Evergreen; good ground cover
Common	H/ Orn, Adapt	Fothergilla, Dwarf	Fothergilla gardenii	species, cultivars	5 - 8	3 - 4’	Mod	WD, M, Mo,	S, L	S, PS, PSh	White spring flowers; beautiful fall color
Uncommon	M/ Orn,	Fothergilla, Large	Fothergilla major	species, cultivars	4 - 8	6 - 10’	Mod	WD, M, Mo,	S, L	S, PS, PSh	White spring flowers; beautiful fall color
Rare	M/ Wild	Hazelnut, American	Corylus americana	Species	4 - 9	8 - 10’	Mod-High	D, M, Mo	S, L, C	S, PS	
Rare	M/ Wild	Hazelnut, Beaked	Corylus cornuta	Species	4 - 9	5 - 6’	Mod-High	D, M, Mo	S, L, C	S, PS, PSh	
Uncommon	M/ Orn, Wild	Holly, Decidous	Ilex decidua	species, cultivars	5 - 9	8 - 12’	Low-Mod	M, Mo, W	S, L, C	S, PS, PSh	
Moderate	H/ Orn, Adapt, Wild	Honeysuckle, Bush	Diervilla lonicera	species, cultivars	3 - 7	3 - 4’	High	D, M, Mo,	S, L, G	S, PS, PSh	

Value: H = High; M = Medium; L = Low; ADAPTable; ORNamental; WILDlife

Moisture: WD = Well drained; VD = Very dry; D = Dry; M = Medium; Mo = Moist; W = Wet

Soils: S = Sand; L = Loam; C = Clay; G = Gravel

Light Requirement: S = Full sun; PS= Partial sun; PSh = Partial shade; Sh = Full shade

Table 2a: Native Shrubs for Use in Landscape Plantings (cont'd)

Availability	Value	Common Name	Latin Name	Type	Zone	Height Range	Drought Tolerance	Moisture	Soil	Light Required	Notes
Common	M/ Orn,	Hydrangea, Annabelle	Hydrangea arborescens	many cultivars	4 - 9	3 - 5’	Mod-High	D, M, Mo	S, L, G	S, PS, PSh, Sh	Late spring-summer flowers; good ornamental large shrub
Moderate	M/ Orn,	Hydrangea, Oak Leaf	Hydrangea quercifolia	many cultivars	5 - 9	4 - 6’	Mod	WD, M, Mo	S, L	S, PS, PSh, Sh	Good hydrangea for shade
Common	M/ Adapt	Inkbery	Ilex glabra	many cultivars	4 - 9	3 - 4’	Mod	M, Mo, W	S, L, C	S, PS, PSh	Good evergreen for exposed sites
Common	M/ Adapt	Juniper, Common	Juniperus communis	many cultivars	2 - 6	2 - 10’	High	D, M, Mo	S, L, G	S, PS	Many varieties both upright & low; good for birds
Common	M/ Adapt	Juniper, Creeping	Juniperus horizontalis	many cultivars	4 - 9	1 - 2’	High	D, M, Mo	S, L, G	S, PS	Many varieties both upright & low; good for birds
Common	M/ Adapt	Juniper,Rocky Mountain	Juniperus scopulorum	many cultivars	3 - 7	to 20’	High	D, M, Mo	S, L, G	S, PS	Many varieties both upright & low; good for birds
Rare	H/ Orn, Adapt, Wild	Meadowsweet	Spirea alba	Species	3 - 5	3 - 5’	Mod-High	D, M, Mo	S, L, C	S, PS. PSh	
Moderate	M/ Orn	Mountain Laurel	Kalmia latifolia	species, cultivars	4 - 9	6 - 15’	Mod	D, M, Mo	S, L, G	PS. PSh, Sh	Avoid exposed areas
Rare	L/ Adapt	Mountain Lover	Paxistima canbyi	Species	3 - 7	1’	High	D, M	S, L, G	S, PS	
Uncommon	H/ Orn, Adapt, Wild	New Jersey Tea	Ceanothus americanus	Species	4 - 8	2 - 3’	High	D, M	S, L, G	S, PS, PSh	
Moderate	H/ Orn, Adapt	Ninebark	Physocarpus opulifolius	species, cultivars	2 - 7	6 - 8’	Mod-High	D, M, Mo	S, L, G	S, PS. PSh	Good for naturalizing
Common	H/ Orn, Adapt	Potentilla	Potentilla fruticose	many cultivars	2 - 6	2 - 3’	High	D, M, Mo	S, L, G	S, PS	Good tough plant; many flower colors available

Value: H = High; M = Medium; L = Low; ADAPTable; ORNamental; WILDlife

Moisture: WD = Well drained; VD = Very dry; D = Dry; M = Medium; Mo = Moist; W = Wet

Soils: S = Sand; L = Loam; C = Clay; G = Gravel

Light Requirement: S = Full sun; PS= Partial sun; PSh = Partial shade; Sh = Full shade

Table 2a: Native Shrubs for Use in Landscape Plantings (cont'd)

Availability	Value	Common Name	Latin Name	Type	Zone	Height Range	Drought Tolerance	Moisture	Soil	Light Required	Notes
Uncommon	**M/ Adapt, Wild**	**Raspberry, Flowering**	**Rubus odoratus**	**species**	**4 - 6**	**3 - 5 '**	**Mod**	**D, M, Mo**	**S, L, G**	**S, PS. PSh, Sh**	
Moderate	**M/ Orn**	**Rhododendron**	**Rhododendron species**	**many cultivars**	**4 - 7**	**5 - 10 '**	**Low-Mod**	**M, Mo**	**S, L**	**PS. PSh**	**Many varieties available; avoid exposed sites**
		Rose, Carolina	Rosa Carolina		4 - 9	2 - 5 '	Low	D, M	S, L	Psh, Sh	Attracts bees & butterflies
Uncommon	**M/ Orn,**	**Rosemay, Bog**	**Andromeda polifolia**	**species, cultivar**	**3 - 6**	**1 - 2 '**	**Low**	**Mo, W**	**WD, S, L**	**S, PS, PSh**	
Uncommon	**M/ Adapt, Wild**	**Sand Cherry**	**Prunus pumilla**	**species**	**2 - 6**	**1 - 2 '**	**High**	**D, M**	**S, L, C**	**S, PS**	
Uncommon	**M/ Adapt, Wild**	**Serviceberry, Saskatoon**	**Amelanchier alnifolia**	**species, cultivars**	**3 - 5**	**6 - 10 '**	**Mod**	**D, M, Mo**	**S, L, G**	**S, PS, PSh**	
Rare	L/ Wild	Snowberry	Symphoricarpos albus	species	3 - 7	3 - 4 '	High	D, M	S, L, C, G	S, PS. PSh,	
Moderate	**H/ Adapt, Wild**	**Spice Bush**	**Lindera benzoin**	**species**	**4 - 9**	**6 - 10 '**	**Mod**	**M, Mo, W**	**S, L, C**	**S, PS, PSh, Sh**	**Early flowering; attracts birds & butterflies**
Moderate	**H/ Orn, Adapt,**	**St Johnswort**	**Hypericum frondosum**	**species, cultivars**	**5 - 8**	**2 - 3 '**	**Mod-High**	**D, M, Mo**	**S, L, G**	**S, PS, PSh**	
Moderate	**H/ Orn, Adapt,**	**St Johnswort**	**Hypericum kalmianum**	**species, cultivars**	**4 - 7**	**2 - 3 '**	**Mod-High**	**D, M, Mo**	**S, L, G**	**S, PS, PSh**	**Can be prolific; good large scale groundcover**
Rare	M/ Orn, Adapt, Wild	Steeplebush	Spirea tomentosa	species	4 - 6	3 - 5 '	Low-Mod	M, Mo, W	S, L, C	S, PS. PSh	
Moderate	**H/ Orn, Adapt, Wild**	**Sumac, Fragrant**	**Rhus aromatic**	**species**	**3 – 9**	**6 - 8 '**	**High**	**VD, M, Mo**	**S, L, G**	**S, PS**	**Good ground cover & erosion control plant**
Common	**H/ Orn, Adapt, Wild**	**Sumac, Fragrant**	**Rhus aromatica "Grow-low"**	**cultivar**	**3 – 9**	**1 - 2 '**	**High**	**VD, M, Mo**	**S, L, G**	**S, PS**	

Value: H = High; M = Medium; L = Low; ADAPTable; ORNamental; WILDlife

Moisture: WD = Well drained; VD = Very dry; D = Dry; M = Medium; Mo = Moist; W = Wet

Soils: S = Sand; L = Loam; C = Clay; G = Gravel

Light Requirement: S = Full sun; PS= Partial sun; PSh = Partial shade; Sh = Full shade

Table 2a: Native Shrubs for Use in Landscape Plantings (cont'd)

Availability	Value	Common Name	Latin Name	Type	Zone	Height Range	Drought Tolerance	Moisture	Soil	Light Required	Notes
Common	H/ Orn, Wild	Summersweet	Clethra alnifolia	many cultivars	4 - 9	2 - 5 '	Mod	M, Mo, W	L, C	S, PS, PSh	Very fragrant; attracts pollinators
Uncommon	M/ Adapt	Sweet Fern	Comptonia peregrina	species	2 - 6	3 - 4 '	High	D, M	S, L, G	S, PS	
Moderate	M/ Orn	Sweet Shrub	Calycanthus floridus	species, cultivars	4 - 9	6 - 8 '	Mod	WD, M, Mo	L	S, PS, PSh	
Common	H/ Orn, Adapt,	Sweet Spire	Itea virginica	species, cultivars	5 - 9	3 - 4 '	Mod-High	M, Mo, W	L, C	S, PS, PSh	Late spring drooping white flowers
Uncommon	L/ Adapt	Sweetgale	Myrica gale	species	1 - 6	3 - 4 '	Low	Mo, W	S, L, C	S, PS	
Moderate	H/ Orn, Adapt, Wild	Viburnum, Winterthur	Viburnum nudum	species, cultivars	5 - 9	6 - 12 '	Low-Mod	M, Mo, W	L, C	S, PS	Many varieties available
Common	H/ Orn, Adapt, Wild	Viburum, Arrowwood	Viburnum dentatum	many cultivars " Bar harbor, Bluechip	3 - 8	6 - 10 '	High	D, M, Mo, W	L, C	S, PS. PSh, Sh	Many varieties available; attracts bees & butterflies
Rare	H/ Orn, Adapt, Wild	Viburum, Maple Leaf	Viburnum acerifolium	species	4 - 8	4 - 6 '	High	D, M, Mo	WD, L, C, G	PS. PSh, Sh	Many varieties available
Uncommon	H/ Orn, Adapt, Wild	Viburum, Witherood	Viburnum cassinoides	species	3 - 8	6 - 12 '	Mod	M, Mo, W	L, C	S, PS	Many varieties available
Rare	M/ Adapt, Wild	Willow, Heart Leaved	Salix eriocephala	species	2 - 6	6 - 13 '	Low-Mod	M, Mo, W	S, L, C	S, PS	
Medium	M/ Adapt, Wild	Willow, Pussy	Salix discolor	species, cultivars	3 - 6	6 - 20 '	Low-Mod	M, Mo, W	L, C	S, PS	Attracts bees & butterflies
Rare	M/ Adapt, Wild	Willow, Sandbar	Salix exigua	species	2 - 6	3 - 15 '	Low-Mod	M, Mo, W	S, L, G	S, PS	

Value: H = High; M = Medium; L = Low; ADAPTable; ORNamental; WILDlife

Moisture: WD = Well drained; VD = Very dry; D = Dry; M = Medium; Mo = Moist; W = Wet

Soils: S = Sand; L = Loam; C = Clay; G = Gravel

Light Requirement: S = Full sun; PS= Partial sun; PSh = Partial shade; Sh = Full shade

Table 2a: Native Shrubs for Use in Landscape Plantings (cont'd)

Availability	Value	Common Name	Latin Name	Type	Zone	Height Range	Drought Tolerance	Moisture	Soil	Light Required	Notes
Rare	M/ Adapt, Wild	Willow, Shining	Salix lucida	Species	2 - 7	8 - 16 '	Low-Mod	M, Mo, W	S, L, C	S, PS	
Rare	M/ Adapt, Wild	Willow, Silky	Salix sericea	Species	2 - 6	4 - 12 '	Low-Mod	M, Mo, W	S, L, C	S, PS	
Common	**M/ Orn, Wild**	**Winter Berry**	**Ilex verticillata**	**many cultivars**	**3 - 9**	**4 - 6 '**	**Mod**	**M, Mo, W**	**L, C**	**S, PS, PSh**	**Nice red berries; plant one male for berry production on females; attracts birds**
Uncommon	**M/ Adapt**	**Witch Hazel**	**Hamamellis virginiana**	**Species**	**3 - 8**	**6 - 10 '**	**Low-Mod**	**WD, D, M, Mo**	**S, L, C**	**S, PS, PSh, Sh**	**Good for naturalizing or creating buffers**

Value: H = High; M = Medium; L = Low; ADAPTable; ORNamental; WILDlife

Moisture: WD = Well drained; VD = Very dry; D = Dry; M = Medium; Mo = Moist; W = Wet

Soils: S = Sand; L = Loam; C = Clay; G = Gravel

Light Requirement: S = Full sun; PS= Partial sun; PSh = Partial shade; Sh = Full shade

Fothergilla; pinterest.com

Sweet Spire; longisladnnatives.com

Table 2b: Native Small Trees for Use in Landscape Plantings

Availability	Value	Common Name	Latin Name	Type	Zone	Height Range	Drought Tolerance	Moisture	Soil	Light Required	Notes
Rare	L/ Adapt	Bladdernut	Staphylea trifolia	species	3 - 8	10 - 15’	Mod	M, Mo	S, L, C	S, PS, PSh	
Rare	M/ Orn	Buckeye, Bottlebrush	Aesculus parviflora	species	5 - 9	6 - 8ft	Low-Mod	M, Mo	WD, S, L,	S, PS. PSh	
Uncommon	**H/ Orn, Adapt, Wild**	**Chokecherry**	**Prunus virginiana**	**species**	**2 - 6**	**15 - 25’**	**High**	**D, M, Mo**	**S, L, C, G**	**S, PS, PSh**	
Moderate	**H/ Orn, Adapt, Wild**	**Chokecherry**	**Prunus virginiana**	**"Schubert, Canada Red:**	**2 - 6**	**15 - 25’**	**High**	**D, M, Mo**	**S, L, C, G**	**S, PS**	
		Crabapple, Sweet	Malus, coronaira		4 - 8	15 - 25’				S, PS, PSh	prefers rich moist soil; attracts bees & butterflies
Uncommon	**H/ Orn, Wild**	**Dogwood, Alternate-leaf**	**Cornus alternifolia**	**species**	**3 - 7**	**10 - 20’**	**Mod**	**M, Mo**	**WD, L, C**	**S, PS, PSh**	**Nice small tree; good for courtyards as a specimen**
Common	**M/ Orn, Wild**	**Dogwood, Flowering**	**Cornus floridus**	**species, cultivars**	**5 - 9**	**15 - 25’**	**Low-Mod**	**M, Mo**	**WD, L, C**	S, PS, PSh	Beautiful understory tree; use Rutgers varieties or Kousa
Uncommon	**M/ Orn, Adapt**	**Fringe Tree**	**Chionanthus virginicus**	**Species**	**4 - 9**	**8 - 25’**	**Mod-High**	**D, M, Mo**	**S, L, C**	**S, PS. PSh**	**Late flowering; slow growing; fragrant flowers**
Moderate	**H/ Orn, Adapt**	**Hawthorn**	**Craetagus species**	**many species, cultivars**	**4 - 8**	**20 - 30’**	**High**	**D, M, Mo**	**WD, L, C**	**S, PS**	**Avoid thorny varieties**
Uncommon	**H/ Orn, Adapt**	**Hawthorn, Cockspur**	**Creatagus crus-galli inermis**	**Species**	**4 - 6**	**20 - 25’**	**High**	**D, M, Mo**	**WD, L, C**	**S, PS**	
Uncommon	**H/ Orn, Adapt**	**Hawthorn, Downy**	**Creatagus mollis**	**Species**	**3 - 6**	**20 - 25’**	**High**	**D, M, Mo**	**WD, L, C**	**S, PS**	
Uncommon	**H/ Orn, Adapt**	**Hawthorn, Washington**	**Creatagus phaenopyrum**	**species, cultivars**	**4 - 8**	**20 - 30’**	**High**	**D, M, Mo**	**WD, L, C**	**S, PS**	
Uncommon	**H/ Orn, Adapt**	**Hawthorn, Winter King**	**Craetagus viridis**	**Cultivar “winter King”**	**5 - 9**	**20 - 25’**	**High**	**D, M, Mo**	**WD, L, C**	**S, PS**	
Uncommon	**L/ Orn**	**Maple, Striped**	**Acer pennsylvanica**	**Species**	**3 - 7**	**15 - 20’**	**Low-Mod**	**D, M, Mo**	**WD, S, L,**	**PS. PSh**	
Uncommon	**M/ Adapt, Wild**	**Plum, American**	**Prunus americana**	**Species**	**3 - 8**	**15 - 25’**	**Mod**	**D, M**	**S, L, C, G**	**S, PS**	**Attracts bees & butterflies**

Value: H = High; M = Medium; L = Low; ADAPTable; ORNamental; WILDlife

Soils: S = Sand; L = Loam; C = Clay; G = Gravel

Moisture: WD = Well drained; VD = Very dry; D = Dry; M = Medium; Mo = Moist; W = Wet

Light Requirement: S = Full sun; PS= Partial sun; PSh = Partial shade; Sh = Full shade

Table 2b: Native Small Trees for Use in Landscape Plantings (cont'd)

Availability	Value	Common Name	Latin Name	Type	Zone	Height Range	Drought Tolerance	Moisture	Soil	Light Required	Notes
Common	**M/ Orn**	**Red Bud**	**Cercis Canadensis**	**species, cultivars**	**4 - 9**	**20 - 25'**	**Low-Mod**	**WD, M, Mo**	**WD, L**	**S, PS. PSh**	**Red/pink spring flowers; can be invasive; use for naturalizing or in areas that will be mown; do not use in ornamental beds; attracts butterflies & bees**
Common	**H/ Orn, Adapt, Wild**	**Serviceberry**	**Amelanchier x grandiflora**	**all cultivars**	**4 - 9**	**15 - 25'**	**Mod-High**	**D, M, Mo**	**S, L, G**	**S, PS. PSh**	**Attracts birds; edible fruit; white spring flowers; nice fall color**
Common	**H/ Orn, Adapt, Wild**	**Serviceberry, Alleghany**	**Amelanchier laevis**	**species, cultivars**	**4 - 9**	**15 - 25'**	**Mod-High**	**D, M, Mo**	**S, L, G**	**S, PS. PSh**	**Attracts birds; edible fruit; white spring flowers; nice fall color**
Common	**H/ Orn, Adapt, Wild**	**Serviceberry, Downy**	**Amelanchier arborea**	**species, cultivars**	**4 - 9**	**15 - 25'**	**Mod**	**D, M, Mo**	**S, L, G**	**S, PS. PSh**	**Attracts birds; edible fruit; white spring flowers; nice fall color**
Common	**H/ Orn, Adapt, Wild**	**Serviceberry, Shadblow**	**Amelanchier Canadensis**	**species, cultivars**	**3 - 8**	**10 - 20'**	**Mod**	**M, Mo, W**	**S, L, C**	**S, PS. PSh**	**Attracts birds; edible fruit; white spring flowers; nice fall color**
Rare	H/ Orn, Adapt	Smoketree, American	Cotinus obovatus	species	4 - 8	15 - 25'	High	D, M, Mo	WD, S, L, G	S, PS. PSh	
Uncommon	**H/ Adapt, Wild**	**Viburnum, Blackhaw**	**Viburnum prunifolium**	**species**	**3 - 9**	**10 - 15'**	**High**	**D, M, Mo**	**L, C**	**S, PS, PSh**	
Uncommon	**H/ Adapt, Wild**	**Viburnum, Nanny Berry**	**Viburnum lentago**	**species**	**2 - 7**	**10 - 20'**	**Mod-High**	**M, Mo, W**	**L, C**	**S, PS**	

Value: H = High; M = Medium; L = Low; ADAPTable; ORNamental; WILDlife

Moisture: WD = Well drained; VD = Very dry; D = Dry; M = Medium; Mo = Moist; W = Wet

Soils: S = Sand; L = Loam; C = Clay; G = Gravel

Light Requirement: S = Full sun; PS= Partial sun; PSh = Partial shade; Sh = Full shade

Table 3a: Native Wildflowers for Use in Landscape Plantings

Availability	Value	Common Name	Latin Name	Zone	Height Range	Moisture	Soil	Light Requirement	Notes
Common	M/ Orn, Adapt, Wild	Ageratum, Hardy	Eupatorium coelestinum	4 - 9	2' - 3'	M, Mo, W	S, L, C	S, PS	
Common	H/ Orn, Adapt	Alumroot	Heuchera americana	3 - 9	1' - 2'	D, M	L	S, PS	
Uncommon	M/ Orn, Adapt, Wild	Aster, Heart Leaved	Aster cordifolius	3 - 8	2' - 3'	D, M	S, L, C	PS, PSh, Sh	
Common	H/ Orn, Adapt, Wild	Aster, New England	Aster novae-angliae	3 - 9	2' - 5'	M, Mo	S, L, C	S, PS	Good for naturalizing; attracts bees & butterflies
Medium	H/ Orn, Adapt, Wild	Aster, New York	Aster novi-belgii	3 - 9	1' - 3'	M, Mo		S, PS	Good for naturalizing
Medium	H/ Orn, Adapt, Wild	Aster, Sky Blue	Aster azureus	3 - 9	1' - 3'	D, M	S, L	S, PS,	Good for naturalizing
Medium	H/ Orn, Adapt, Wild	Aster, Smooth	Aster laevis	3 - 9	1' - 3'	D, M	S, L	S, PS	Good for naturalizing
Uncommon	M/ Orn, Adapt, Wild	Aster, White Wood	Aster divaricatus	3 - 8	1' - 2'	D, M	S, L, C	PS, PSh, Sh	Good for naturalizing
Medium	M/ Orn, Adapt, Wild	Beard Tongue	Penstemon grandiflorus	3 - 9	2' - 5'	D, M	S, G	S	Attracts bees & butterflies
Common	H/ Orn, Adapt, Wild	Bee Balm	Monarda didyma	3 - 9	3' - 4'	M, Mo	S, L, C	S, PS, PSh	Attracts pollinators
Common	H/ Orn, Adapt, Wild	Black-eyed Susan	Rudbeckia hirta	3 - 9	2' - 3'	D, M		S, PS	Good for meadows
Common	M/ Orn, Adapt	Blanket Flower	Gaillardia pulchella	4 - 8	1' - 3'	D, M	S, L	S	
Common	M/ Orn, Adapt	Blanket Flower	Gaillardia x grandifolia	4 - 8	1' - 3'	D, M	S, L	S	
Common	H/ Orn, Adapt, Wild	Blazing Star, Dense	Liatris spicata	4 - 8	3' - 5'	M, Mo	S, L, C	S	Good for meadows; attracts bees & butterflies

Value: H = High; M = Medium; L = Low; ADAPTable; ORNamental; WILDlife

Sils: S = Sand; L = Loam; C = Clay; G = Gravel

Moisture: WD = Well drained; VD = Very dry; D = Dry; M = Medium; Mo = Moist; W = Wet

Light Requirement: S = Full sun; PS= Partial sun; PSh = Partial shade; Sh = Full shade

Table 3a: Native Wildflowers for Use in Landscape Plantings (cont'd)

Availability	Value	Common Name	Latin Name	Zone	Height Range	Moisture	Soil	Light Requirement	Notes
Uncommon	H/ Orn, Adapt, Wild	Blazing Star, Northern	Liatris borealis	4 - 8	2' - 3'	D, M	WD, S, L	S	Good for meadows; attracts bees & butterflies
Common	H/ Orn, Adapt, Wild	Blazing Star, Prairie	Liatris pycnostachya	3 - 9	3' - 5'	M, Mo	S, L, C	S, PS	Good for meadows; attracts bees & butterflies
Uncommon	H/ Orn, Adapt, Wild	Blazing Star, Rough	Liatris aspera	3 - 9	2' - 4'	D, M	WD, S, L	S	Good for meadows; attracts bees & butterflies
Medium	M/ Orn	Bleeding Heart, Wild	Dicentra exima	4 - 9	1'	M, Mo	S, L, C	S, PS, PSh, Sh	
Medium	H/ Orn, Adapt	Blood Root	Sanguinaria canadensis	3 - 9	<1'	M	WD	PS, PSh, Sh	
Uncommon	M/ Orn, Adapt	Blue Star	Amsonia tabernaemontana	3 - 9	3'	D, M, Mo	S, L, C	S, PS	Good for naturalizing
Medium	M/ Orn, Adapt, Wild	Blue Vervain	Verbena hastata	3 - 9	2' - 4'	M, W		S, PS	
Medium	H/ Orn, Adapt, Wild	Brown Eyed Susan	Rudbeckia triloba	3 - 9	2' - 3'	M		S, PS	
Common	H/ Orn, Adapt, Wild	Butterfly Weed	Asclepias tuberosa	3 - 9	2' - 3'	D, M	S, L	S, PS,	
Medium	M/ Orn, Adapt	Canada Anemone	Anemone canadensis	2 - 9	1' - 2'	M, Mo	L	PS, PSh, Sh	
Medium	M/ Orn, Wild	Cardinal Flower	Lobelia cardinalis	3 - 9	2' - 4'	Mo, W	S, L	S, PS, PSh	Good for wet areas
Common	H/ Orn, Adapt	Cohosh, Black	Cimicifuga racemosa	3 - 9	3' - 5'	D, M, Mo	L, G	PS, PSh, Sh	Good for shade
Uncommon	L/ Orn, Adapt	Cohosh, Blue	Caulophyllum thalictroides	3 - 8	2' - 3'	M, Mo	S, L	PSh, Sh	
Common	H/ Orn, Adapt, Wild	Columbine	Aquilegia canadensis	3 - 9	1' - 2'	D, M	WD	S, PS, PSh,	
Uncommon	H/ Orn, Adapt, Wild	Coneflower, Eastern	Rudbeckia fulgida	3 - 9	2' - 3'	M		S, PS	Good for meadows/birds/butterflies

Value: H = High; M = Medium; L = Low; ADAPTable; ORNamental; WILDlife

Moisture: WD = Well drained; VD = Very dry; D = Dry; M = Medium; Mo = Moist; W = Wet

Soils: S = Sand; L = Loam; C = Clay; G = Gravel

Light Requirement: S = Full sun; PS= Partial sun; PSh = Partial shade; Sh = Full shade

Table 3a: Native Wildflowers for Use in Landscape Plantings (cont'd)

Availability	Value	Common Name	Latin Name	Zone	Height Range	Moisture	Soil	Light Requirement	Notes
Medium	H/ Orn, Adapt, Wild	Coneflower, Pale-Purple	Echinacea pallida	3 - 9	2' - 3'	D, M	WD, S, L, C	S, PS	Good for meadows/birds/butterflies
Common	H/ Orn, Adapt, Wild	Coneflower, Purple	Echinacea purpurea	3 - 9	2' - 3'	D, M	WD, S, L, C	S, PS	Good for meadows/birds/butterflies
Uncommon	H/ Orn, Adapt, Wild	Coneflower, Yellow	Echinacea paradoxa	4 - 9	2' - 3'	D, M	WD, S, L, C	S	Good for meadows/birds/butterflies
Common	H/ Orn, Adapt, Wild	Coreopsis, Lanceleaf	Coreopsis lanceolata	3 - 9	1' -2'	D, M	S, L	S, PS	Good ground cover
		Cranesbill, Wild	Geranium maculatum	3 - 8	1' - 2'	D, M	S, L	S, PS, Sh	Attracts bees & butterflies
Medium	M/Adapt, Wild	Culvers Root	Veronicastrum virginicum	3 - 9	3' - 5'	M, W		S, PS	Good for naturalizing
Medium	M/ Orn, Adapt, Wild	False Aster	Boltonia asteroides	4 - 9	3' - 4'	D, M, Mo	S, L, C	S, PS	Tall sun-loving lavender flower
Medium	H/ Orn, Adapt, Wild	False Solomon Seal	Smilacina racemose	3 - 8	1' - 3'	M		PS, PSh, Sh	
Medium	H/ Orn, Adapt, Wild	False-indigo, Blue	Baptisia australis	4 - 8	3' - 4'	D, M,	S, L, C	S, PS	Nice meadow plant; attracts bees & butterflies
Uncommon	M/ Orn, Adapt, Wild	False-indigo, Cream	Baptisia bracteata	4 - 8	1' - 2'	D, M,	S, L	S, PS	Nice meadow plant
Uncommon	M/ Orn, Adapt, Wild	False-indigo, White	Baptisia lactea	4 - 8	3' - 5'	M, Mo	S, L, C	S, PS	Nice meadow plant
Common	H/ Orn, Adapt	Foam Flower	Tiarella cordifolia	3 - 9	<1'	M		PS, PSh, Sh	Good for shady groundcover
		Gentian, Bottle	Gentiana andrewsii	3 - 7	1' - 2'	M		S, PS	Attracts butterflies & bees
Medium	M/ Orn, Adapt	Geranium, Wild	Geranium maculatum	3 - 9	1'	D, M	L	S, PS, PSh, Sh	

Value: H = High; M = Medium; L = Low; ADAPTable; ORNamental; WILDlife

Moisture: WD = Well drained; VD = Very dry; D = Dry; M = Medium; Mo = Moist; W = Wet

Soils: S = Sand; L = Loam; C = Clay; G = Gravel

Light Requirement: S = Full sun; PS= Partial sun; PSh = Partial shade; Sh = Full shade

Table 3a: Native Wildflowers for Use in Landscape Plantings (cont'd)

Availability	Value	Common Name	Latin Name	Zone	Height Range	Moisture	Soil	Light Requirement	Notes
Medium	H/ Orn, Adapt	Goat's Beard	Aruncus dioicus	4 - 8	3' - 5'	Mo	Rich	PS, PSh, Sh	Good for naturalizing
Uncommon	H/ Orn, Adapt	Gold Star	Chrysogonum virginianum	5 - 9	<1'	D, M, Mo	S, L, C	S, PS, PSh	
Uncommon	M/ Orn, Adapt, Wild	Goldenrod, Blue Stemmed	Solidago caesia	3 - 9	1' - 3'	D, M		S, PS, PSh, Sh	Good for meadows
Uncommon	H/ Orn, Adapt, Wild	Goldenrod, Showy	Solidago speciosa	3 - 9	2' - 5'	D, M		S, PS	Good for meadows
Uncommon	M/ Orn, Adapt, Wild	Goldenrod, Zigzag	Solidago flexicaulis	3 - 8	1' - 4'	D, M		S, PS, PSh, Sh	Good for meadows
Uncommon	M/ Orn, Adapt	Hepatica, Sharp Lobed	Hepatica acutiloba	3 - 8	<1'	M, Mo	L	PS, PSh	
Medium	H/ Orn, Adapt, Wild	Iris, Blue Flag	Iris versicolor	4 - 9	2' - 3'	M, Mo, W	S, L, C	S, PS, PSh	Good for wet areas
Uncommon	H/ Orn, Adapt	Iris, Crested	Iris cristata	4 - 9	<1'	M, Mo	S, L	PS, PSh	Good for wet areas
Uncommon	M/Adapt, Wild	Ironwood, New York	Vernonia noveboracensis	3 - 9	3' - 5'	M, W	Rich	S, PS	Very nice tall dark purple flower
Common	M/ Orn, Adapt	Jack-in-the-pulpit	Arisaema triphyllum	3 - 9	1'	M, Mo	S, L	PS, PSh, Sh	
Medium	M/ Orn, Adapt	Jacobs Ladder	Polemonium reptans	3 - 8	1'	M, Mo	L	PS, PSh	Attracts bees & butterflies
Common	H/ Orn, Adapt, Wild	Joe-pye-weed, Purple	Eupatorium purpureum	3 - 8	3' -6'	M, Mo, W	S, L, C	S, PS, PSh	Good for wet areas
Uncommon	H/ Orn, Adapt, Wild	Joe-pye-weed, Spotted	Eupatorium maculatum	3 - 9	3' -6'	M, Mo, W	S, L, C	S, PS, PSh	Good for wet areas
Medium	H/ Orn, Adapt	Larkspur, Tall Blue	Delphinium exaltatum	4 - 9	1' -2'	D, M	S, L	S, PS	
Common	H/ Orn, Adapt, Wild	Lavender Hyssop	Agastache foeniculum	3 - 9	2' - 3'	D, M,	S, L, C, G	S, PS	Good for meadows; attracts bees & butterflies

Value: H = High; M = Medium; L = Low; ADAPTable; ORNamental; WILDlife

Moisture: WD = Well drained; VD = Very dry; D = Dry; M = Medium; Mo = Moist; W = Wet

Soils: S = Sand; L = Loam; C = Clay; G = Gravel

Light Requirement: S = Full sun; PS= Partial sun; PSh = Partial shade; Sh = Full shade

Table 3a: Native Wildflowers for Use in Landscape Plantings (cont'd)

Availability	Value	Common Name	Latin Name	Zone	Height Range	Moisture	Soil	Light Requirement	Notes
Common	H/ Orn, Adapt, Wild	Lobelia, Great Blue	Lobelia siphilitica	3 – 9	2' - 3'	M, Mo, W	S, L, C	S, PS	Attracts bees & butterflies
		Lupine, Wild	Lupinus perennis	3 – 8	1' - 2'	D	S	S,PS	Attracts bees & butterflies
Uncommon	L/ Orn, Adapt	Marsh-marigold	Caltha palustris	1 – 8	1' - 2'	Mo, W	L, C	S, PS, PSh, Sh	
Uncommon	M/ Orn, Adapt	May Apple	Podophyllum peltatum	3 – 9	1' - 2'	D, M, W	WD, S, L, C	PS, PSh	
Uncommon	L/ Adapt	Meadow Rue, Early	Thalictrum dioicum	3 – 8	1' - 3'	M		PS, PSh, Sh	
Common	M/ Orn, Adapt	Meadow Rue, Tall	Thalictrum pubescens	3 – 9	3' - 8'	M, W		S, PS, PSh, Sh	
Medium	M/ Orn, Adapt, Wild	Nodding Pink Onion	Allium cernuum	3 – 9	1'-2'	M, Mo	S, L, C	S, PS	
Common	H/ Orn, Adapt, Wild	Ox Eye Sunflower	Heliopsis helianthoides	3 – 9	3' - 5'	D, M	S, L, C	S, PS	Good for meadows
Common	M/ Orn, Adapt, Wild	Penstemon, Smooth	Penstemon digitalis	3 – 9	2' - 4'	M, Mo	S, L, C	S, PS	
Common	H/ Orn, Adapt	Phlox, Moss	Phlox subulata	3 – 9	<1'	D, M	WD, S, G	S	Many varieties; creeping to upright
Common	H/ Orn, Wild	Phlox, Summer	Phlox paniculata	3 – 9	3' - 5'	M, Mo	S, L, C	S, PS	Many varieties; creeping to upright
Medium	H/ Orn, Wild	Phlox, Wild Blue	Phlox divaricata	3 – 9	1'	M, Mo	S, L, C	PS, PSh, Sh	Many varieties; creeping to upright
Medium	M/ Orn, Adapt	Poppy, Celandine	Stylophorum diphyllum	4 – 8	1' - 2'	M		PS, PSh, Sh	
Uncommon	M/ Orn, Adapt, Wild	Prairie Clover, Pale-Purple	Dalea purpurea	3 – 9	1' -2'	D, M	S, L, C	S	
Uncommon	M/ Orn, Adapt, Wild	Prairie Clover, White	Dalea candida	3 – 9	1' -2'	D, M	S, L	S	

Value: H = High; M = Medium; L = Low; ADAPTable; ORNamental; WILDlife

Moisture: WD = Well drained; VD = Very dry; D = Dry; M = Medium; Mo = Moist; W = Wet

Soils: S = Sand; L = Loam; C = Clay; G = Gravel

Light Requirement: S = Full sun; PS= Partial sun; PSh = Partial shade; Sh = Full shade

Table 3a: Native Wildflowers for Use in Landscape Plantings (cont'd)

Availability	Value	Common Name	Latin Name	Zone	Height Range	Moisture	Soil	Light Requirement	Notes
Uncommon	M/ Orn, Adapt	Prairie Smoke	Geum triflorum	4 - 8	<1'	D, M	S, L	S, PS	
Uncommon	M/ Orn, Adapt	Queen of the Prairie	Filipendula rubra	3 - 8	6' - 8'	M, Mo	S, L, C	S, PS	
Rare	M/ Orn, Adapt	Rattlesnake master	Eryngium yuccifolium	4 - 8	3' - 5'	D, M	S, L, C	S	
Uncommon	M/ Orn, Adapt	Red Baneberry	Actaea rubra	2 - 8	1'-2'	M, Mo	L	PSh, Sh	
Medium	M/Adapt, Wild	Snakeroot, White	Eupatorium rugosum	4 - 9	2' - 3'	M, Mo	S, L, C	S, PS, PSh	
Common	M/ Orn, Adapt	Solomon's Seal	Polygonatum biflorum	3 - 9	1' - 3'	M, Mo	Rich, S, L, C	PS, PSh, Sh	Good for naturalizing shady areas
Medium	H/ Orn, Adapt, Wild	Spiderwort, Virginia	Tradescantia virginiana	3 - 9	1' - 2'	M	Rich	S, PS, PSh	Attracts butterflies & bees
Medium	H/ Orn, Adapt, Wild	Swamp Milkweed	Asclepias incarnata	3 - 9	2' - 4'	M, Mo, W	S, L, C	S, PS,	Attracts butterflies (Monarchs) & bees
Common	H/ Orn, Adapt, Wild	Tickseed, Threadleaf	Coreopsis verticillata	4 - 9	1' -2'	M, Mo	S, L	S, PS	
Uncommon	M/ Orn, Adapt	Turk's Cap Lily	Lilium superbum	4 - 9	3' - 8'	M, Mo, W		S, PS	
Medium	M/ Orn, Adapt, Wild	Turtle Head, Pink	Chelone lyonii	4 - 9	2' - 3'	M, Mo, W	S, L, C	S, PS, PSh	
Medium	M/ Orn, Adapt, Wild	Turtle Head, White	Chelone glabra	3 - 9	2' - 3'	M, Mo, W	S, L, C	S, PS, PSh	
Uncommon	M/ Orn	Umbrella Leaf	Diphylleia cymosa	4 - 8	2'	Mo, W	L	PSh, Sh	
Rare	L/ Adapt	Virgin's Bower	Clematis virginiana	3 - 9	Vine	M, Mo, W	S, L, C	S, PS	
Medium	M/ Orn, Adapt	White Dolls Eye	Actaea pachypoda	3 - 8	1'-2'	M, Mo	L	PSh, Sh	
Common	H/ Orn, Adapt, Wild	Wild- bergamot, Lavender	Monarda fistulosa	3 - 9	3' - 4'	M, Mo, W	S, L, C	S, PS, PSh	Attracts bees & butterflies
Medium	M/ Orn	Wild Ginger	Asarum canadense	3 - 8	<1'	M, Mo	WD, S, L, G	PSh, Sh	

Value: H = High; M = Medium; L = Low; ADAPTable; ORNamental; WILDlife

Moisture: WD = Well drained; VD = Very dry; D = Dry; M = Medium; Mo = Moist; W = Wet

Soils: S = Sand; L = Loam; C = Clay; G = Gravel

Light Requirement: S = Full sun; PS= Partial sun; PSh = Partial shade; Sh = Full shade

Table 3b: Native Grasses for Use in Landscape Plantings

Availability	Value	Common Name	Latin Name	Zone	Height Range	Moisture	Soil	Light Requirement	Notes
Common	**H/ Orn, Adapt, Wild**	**Bluestem, Big**	**Andropogon gerardii**	**3 - 9**	**5’ - 8’**	**D, M, Mo**	**S, L, C**	**S**	
Common	**H/ Orn, Adapt, Wild**	**Bluestem, Little**	**Schizachyrium scoparium**	**4 - 9**	**2’ - 3’**	**D, M**	**S, L**	**S, PS**	
Uncommon	**M/ Orn, Adapt**	**Bottlebrush Grass**	**Elymus hystrix**	**3 - 8**	**2’ - 5’**	**D, M**	**S, L**	**PS, PSh, Sh**	
Rare	M/ Orn, Adapt, Wild	Gramma, Blue	Bouteloua gracilis	3 - 8	1’ - 2’	D, M	S, L	S, PS	
Uncommon	**H/ Orn, Adapt, Wild**	**Gramma, Side Oats**	**Bouteloua curtipendula**	**3 - 8**	**2’ - 3’**	**D, M**	**S, L**	**S, PS**	
Rare	M/ Orn, Adapt	Hairgrass, Muhly Grass,	Muhlenbergia capillaris	3 - 6	2’ - 3’	D, M, Mo	S, L, G	S, PS	
Rare	M/ Orn, Adapt	Hairgrass, Wavy	Deschampsia flexuosa	3 - 8	1’ - 2’	D, M	S, L, G		
Common	**H/ Orn, Adapt, Wild**	**Indian Grass**	**Sorghastrum nutans**	**4 - 8**	**5’ - 7’**	**D, M, Mo**	**S, L, C**		
Rare	M/ Orn, Adapt	June Grass	Koeleria macrantha	3 - 8	2’ - 3’	D, M	S, L, G	S, PS	
Rare	M/ Orn, Adapt	Lovegrass, Purple	Eragrostis spectabilis	5 - 9	2’ - 3’	D, M, Mo	S, L	S, PS	
Medium	**H/ Orn, Adapt, Wild**	**Oats, Northern Sea**	**Chasmanthium latifolium**	**4 - 8**	**3’ - 4’**	**D, M, Mo**	**S, L**	**S, PS, PSh**	
Common	**H/ Orn, Adapt, Wild**	**Prairie Dropgrass**	**Sporobolus heterolepis**	**3 - 9**	**2’ - 4’**	**D, M**	**S, L, C**		
Rare	L/Adapt	Sedge, Appalachian	Carex appalachica	3 - 7	8 - 10”	D, M	S, L	PS, PSh, Sh	

Value: H = High; M = Medium; L = Low; ADAPTable; ORNamental; WILDlife

Moisture: WD = Well drained; VD = Very dry; D = Dry; M = Medium; Mo = Moist; W = Wet

Soils: S = Sand; L = Loam; C = Clay; G = Gravel

Light Requirement: S = Full sun; PS= Partial sun; PSh = Partial shade; Sh = Full shade

Table 3b: Native Grasses for Use in Landscape Plantings (cont'd)

Availability	Value	Common Name	Latin Name	Zone	Height Range	Moisture	Soil	Light Requirement	Notes
Rare	M/Adapt	Sedge, Ivory	Carex eburnea	4 - 6	6"	D, M, Mo	S, L, G	PS, PSh, Sh	
Medium	**M/Adapt**	**Sedge, Pennsylvania**	**Carex pensylvanica**	**4 to 8**	**6" to 8"**	**D, M**	**S, L, G**	**PS, PSh, Sh**	
Common	**M/ Adapt, Wild**	**Switch Grass**	**Panicum virgatum**	**5 to 9**	**3' to 6'**	**D, M, Mo, W**	**S, L, C**	**S, PS**	
Rare	M/ Orn, Adapt	Wild Rye, Blue	Elymus glaucus	4 to 8	2' -3'	D, M, Mo	S, L	S, PS	
Medium	**M/Adapt, Wild**	**Wild Rye, Canada**	**Elymus canadensis**	**3 to 8**	**4' - 5'**	**D, M, Mo**	**S, L, C**	**S, PS**	
Medium	**M/Adapt, Wild**	**Wild Rye, Virginia**	**Elymus virginicus**	**3 to 8**	**4' - 5'**	**M, Mo**	**S, L, C**	**S, PS, PSh**	

Value: H = High; M = Medium; L = Low; ADAPTable; ORNamental; WILDlife

Moisture: WD = Well drained; VD = Very dry; D = Dry; M = Medium; Mo = Moist; W = Wet

Soils: S = Sand; L = Loam; C = Clay; G = Gravel

Light Requirement: S = Full sun; PS= Partial sun; PSh = Partial shade; Sh = Full shade

Switch Grass; pinterest.com

Table 4: Non-Native Trees Shrubs and Wildflowers, that are acceptable to use in landscape plantings. If non-native plants are used and they become aggressive due to prevailing conditions and overtake other natives in the landscape, ask an arborist or landscape professional for advice. For a list of the codes used, see page 37.

Large Shade Trees			
Code	Common Name	Latin Name	Notes
A	Beech, European	Fagus sylvatica	
A	Beech, Purpleleaf European	Fagus sylvatica purpurea	
B, D	Birch, Himilayan	Betula albo-sinensis	
B, D	Birch, Jacquemonti	Betula jacquemontii	
B, D	Birch, Whitespire	Betula platyphylla japonica	Highly susceptible to birch borer & leaf miner; use River Birch or Heritage River Birch
A	Cherry, Flowering	Prunus subhirtella	many varieties available; early flowering
A	Cherry, Oriental	Prunus serrulata	
A	Cherry, Sargent	Prunus sargentii	
B	Chinese Fringe Tree	Chionanthus retusus	
B	Filbert, Turkish	Corylus colurna	

Large Shade Trees			
Code	Common Name	Latin Name	Notes
A	Ginko	Ginko biloba	
A	Hornbeam, European	Carpinus betulus	Fastigiated variety good for street tree planting
A	Hornbeam, Upright	Carpinus betulus fastigiata	
B, D	Horsechestnut, Ruby-red	Aesculus x carnea	
B	Katsura Tree	Cercidiphyllum japonicum	Nice ornamental tree
A	Linden, Little-leaf	Tilia cordata	
B, D	Maple, English	Acer campestre	
B, E	Maple, Japanese	Acer palmatum (green)	
A	Maple, Paperbark	Acer grisium	Good ornamental tree with cinnamon-colored exfoliating bark
B, E	Maple, Purpleleaf Japanese	Acer palmatum atropurpureum	Many varieties available; valuable ornamental tree

Large Shade Trees			
Code	Common Name	Latin Name	Notes
A	Maple, Threadleaf Japanese	Acer palmatum dissectum	Many varieties available; valuable ornamental tree
B, D	Maple, Trident	Acer burgeranum	
	Oak, English	Quercus robur f. fastigiata	Prefers moist well-drained loam; oval shaped acorns
A	Parrotia, Persian	Parrotia persica	
	Pear, Flowering	Pyrus calleryana	Use Callery or Red Spire; DO NOT use Bradford
B	Planetree, London	Platanus x acerifolia	Good urban tree. Cross between European & American species
A	Redwood, Dawn	Metasequoia glyptostroboides	
C, D	Rubber Tree	Eucommia ulmoides	
D, E	Snowbell, Fragrant	Styrax obassia	
B	Snowbell, Japanese	Styrax japonicas	
A	Stewartia, Japanese	Stewartia pseudocamillia	
A	Stewartia, Korean	Stewartia koreana	
A	Zelkova, Japanese	Zelkova serrata	

Small Flowering Trees			
Code	Common Name	Latin Name	Notes
E	Crabapple	Malus species	Many varieties, including sterile (Spring Snow); needs pruning every 3 - 4 years
D, E	Dogwood, Cornelian Cherry	Cornus mas	Attracts birds; edible fruit
B	Dogwood, Kousa	Cornus kousa	Nice exfoliating bark
B	Dogwood, Stellar	Cornus rutgan	Hybrid of Kousa & Florida; use in place of traditional dogwoods
B, D	Golden Chain Tree	Laburnum x watereri	
	Golden Rain Tree	Koelreuteria paniculata	Tolerates urban pollution
B	Lilac, Japanese Tree	Syringa reticulata	One of the toughest trees for urban areas; highly recommended
B	Magnolia, Hybrid	Magnolia x hyrbird	Early flowering
B	Magnolia, Loebneri	Magnolia x loebneri	
B	Magnolia, Saucer	Magnolia x soulangiana	
B	Magnolia, Star	Magnolia stellata	

Non-Native Conifers			
Code	Common Name	Latin Name	Notes
	Cedar, Western Red	Thuja, plicata	Fast growing; resistant to deer; single stem; use in place of Emerald Green & Dark American Arborvitae

Non-native shrubs			
Code	Common Name	Latin Name	Notes
D	Abelia, Fragrant	Abelia grandiflora	Good for naturalizing
A, D	Andromeda, Japanese	Pieris japonica	Evergreen; easy care; avoid windy sites
B	Arborvitae, Oriental	Thuja orientalis	
A, B	Azaleas	Rhododendron species	Many varieties available; avoid exposed sites; attracts bees & butterflies
C, D	Beautybush	Kolkwitzia amabilis	
E	Bluebeard Shrub,	Caryopteris x clandonensis	Very showy; easy care
A	Boxwood	Buxus microphylla	Deer resistant; easy care
A	Boxwood, Common	Buxus sempervirons	
	Butterfly Bush	Buddleia	Consider sterile cultivars; can be invasive
B	Chinese Fringe Tree	Chionanthus retusus	
B	Cletha, Japanese	Clethra barbinervis	
D	Daphne, Rose	Daphne cneorum	

Non-native shrubs			
Code	Common Name	Latin Name	Notes
B	Deutzia	Deutzia species	
B	Deutzia, Slender	Deutzia gracilis	Good for hedging; seasonal pruning may be necessary
A	Falsecypress	Chamaecyperis obtusa	Good focal trees & shrubs
A	Falsecypress	Chamaecyperis pisifera	Good focal trees & shrubs
A	Falsecypress	Chamaecyperis species	Good focal trees & shrubs
A, D	Fetterbush	Leucothoe fontanesiana	
E	Forsythia	Forsythia x intermedia	Good tough plant in a variety of sizes; early flowering; good for naturalizing
D	Forsythia, White	Abeliophyllum distichum	
B	Holly, Blue	Ilex x meserveae	Plant at least 1 male for berries on the females; attracts birds; tolerates pollution
B	Holly, Japanese	Ilex crenata	Avoid windy sites
B	Hydrangea	Hydrangea serrata	Many varieties available
B	Hydrangea, Bigleaf	Hydrangea macrophylla	Many varieties available

Non-native shrubs			
Code	Common Name	Latin Name	Notes
B	Hydrangea, Panicle	Hydrangea paniculata	Many varieties available
B	Juniper, Chinese	Juniperus chinensis	Many varieties; both upright & low; good for birds
B	Juniper, Japanese	Juniperus procumbens	
D	Kerria, Japanese	Kerria japonica	
A, D	Leptodermis	Leptodermis oblonga	
B	Lilac, Common	Syringa vulgaris	
B	Lilac, Koren	Syringa meyeri	Dwarfs recommended for easy care
B	Lilac, Manchurian	Syringa patula	Dwarfs recommended for easy care
C, D	Mock Orange	Philadephus coronarius	
B, D	Mock Orange	Philadephus x virginalis	
B	Pine, Mugo	Pinus mugo	
D	Redvien, Enkianthus,	Enkianthus campanulatus	
A, B	Rhododendron	Rhododendron species	

Non-native shrubs			
Code	Common Name	Latin Name	Notes
	Rose, Rugosa	Rose, Salt-spray	Tolerates salt spray; good for erosion control
E	Rose of Sharon	Hibiscus syriacus	Tolerant of urban pollution; summer flower; attracts butterflies & bees
B	Smokebush	Cotinus coggygria	Purple foliage; showy
E	Spirea	Spirea x bumalda	Many varieties available; good, tough plant; showy
C, D	Spirea, Bridalwreath	Spirea prunifolia	Many varieties available; good, tough plant; showy
E	Spirea, Nippon	Spirea nipponica	Many varieties available; good, tough plant; showy
C, D	Spirea, Vanhoutte	Spirea x vanhouttei	Many varieties available; good, tough plant; showy
B	St John's Wort	Hypericum species	
B	Stephanadra, Cutleaf	Stephanandra incisa	
B	Tea Rose, Hybrid	Rosa x hyrbrids	
B	Viburnum, Burkwood	Viburnum x burkwoodii	
B	Viburnum, Doublefile	Viburnum plicatum tomentosum	
B	Viburnum, Fragrant	Viburnum ferreri 'Nanum'	

Non-native shrubs			
Code	Common Name	Latin Name	Notes
B	Viburnum, Japanese Snowball Bush	Viburnum plicatum	
B	Viburnum, Judd	Viburnum x judii	Good for hedges; naturalizing; focal point; many varieties
B	Viburnum, Koreanspice	Viburnum carlesii	Good for hedges; naturalizing; focal point; many varieties
B	Viburnum, Leatherleaf	Viburnum rhytidophyllum	Good for hedges; naturalizing; focal point; many varieties
E	Viburnum, Linden	Viburnum dilatatum	Good for hedges; naturalizing; focal point; many varieties
E	Viburnum, Onandaga	Viburnum sargentii	Good for hedges; naturalizing; focal point; many varieties
B	Viburnum, Prague	Viburnum pragense 'Decker'	Good for hedges; naturalizing; focal point; many varieties
B	Viburnum, Siebold	Viburnum sieboldii	Good for hedges; naturalizing; focal point; many varieties
E	Viburnum, Wayfaringtree	Viburnum lantana	Good for hedges; naturalizing; focal point; many varieties
B	Wiegela	Wiegela florida	Attracts hummingbirds
B	Willow, Artic Blue	Salix purpurea 'Nana'	
A	Witchhazel, Chinese	Hamamelis mollis	
A	Witchhazel, Hybrid	Hamamelis x intermedia	

Non-native shrubs			
Code	Common Name	Latin Name	Notes
B	Yew, English	Taxus baccata	Good groundcover; easy care; no pruning needed; avoid deer
B	Yew, Hybrid	Taxus x media	
B	Yew, Japanese	Taxus cuspidata	

Wildflowers			
Code	Common Name	Latin Name	Notes
A	Alumroot	Heuchera species	Coral Bells; many varieties available
B	Artemisia, Silver Mound	Artemisia schmidtiana	
B	Astilbe	Astilbe x arendsii	Very showy; tough; easy care; prefers part shade; some varieties tolerate sun
B	Astilbe, Chinese	Astilbe chinensis	Very showy; tough; easy care; prefers part shade; some varieties tolerate sun
B	Astilbe, Japanese	Astilbee japonica	Very showy; tough; easy care; prefers part shade; some varieties tolerate sun
B	Basket of Gold	Aurinia saxatilis	
B	Bell Flower	Platycodon grandiflorus	

Wildflowers			
Code	Common Name	Latin Name	Notes
B	Bleeding Heart	Dicentra spectabilis	
B	Bugloss, Siberian	Brunnera macrophylla	Good groundcover & for naturalizing
B	Catchfly, German	Lychnis viscaria	
B	Columbine, Hybrid	Aquilegia x hybrida	
B	Daylilly, Hybrid	Hermocallis x hybrida	Many varieties available; good for meadows/birds/butterflies
	Flower, Chinese	Scabiosa columbaria	
B	Geranium Cranesbill, Blood-red	Geranium sanguineum	
	Geranium, Fragrant	Geranium Biokova	Good groundcover; fragrant foliage; easy care
	Geranium, Rozanne	Rozanne Geranium	Good groundcover; flowers June – November
B	Harebell, Carpathian	Campanula carpatica	Good for naturalizing
B	Hosta	Hosta Species	
B, C	Lady's Mantle	Alchemilla mollis	Good for naturalizing shady areas

Wildflowers			
Code	Common Name	Latin Name	Notes
B	Larkspur, Candle	Delphinium elatum	
B	Ligularia, Bigleaf	Ligularia dentate	Good for wet areas; spiky yellow flower; DO NOT use Othello as it is invasive
B	Mum, Hardy	Chrysanthemum x morifolium	
B	Pasque Flower	Pulsatilla vulgaris	
B	Peony, Tree	Paeonia suffruticosa	Nice specimen plant
B	Pinks, Cheddar	Dianthus gratianopolitanus	
B	Pinks, Garden	Dianthus deltoids	Good groundcover; easy care
B	Sage, Meadow	Salvia pratensis	Good for meadows & massing
B	Sage, Perennial	Salvia nemorosa	Good for meadows & massing
B	Salvia, Perennial	Salvia x superba	
B	Sedum	Sedum species	Tough plant; very drought tolerant
B	Sedum, Autumn Joy	Sedum telephium	Tough plant; very drought tolerant

Wildflowers			
Code	Common Name	Latin Name	Notes
B	Speedwell	Veronica spicata	Good for meadows & massing
B	Spurge, Cushion	Euphorbia polychrome	
	Sunflower, perennial	Helianthus spp	Good meadow plant; attracts bees
	Sweet Woodruff	Galluim odoratum	Good prolific groundcover
B	Yarrow, Common	Achilea millefolium	Good for meadows
B	Yarrow, Fern-Leaf	Achilea aquilegifolium	Good for meadows
B	Yarrow, Fern-Leaf	Achilea filipendula	Good for meadows

Grasses			
Code	Common Name	Latin Name	Notes
	Feather Reed Grass	Calamagrostis spp	Easy care
	Fountain Grass, Hamelyn	Pennisetum "Hamelyn"	Do not use common variety as it is invasive
	Japanese Forest Grass	Hakonechloa spp	Good groundcover & for focal points; easy care
	Maiden Grass	Miscanthus sinensis	Grown for its purple-flushed flower plumes in late summer; fabulous focal point
	Oat Grass, Blue	Helictotrichon sempervirens	Good for meadows & naturalizing

A: Low risk of escape from cultivation

B: Low risk of escape. Recommend using an equivalent native replacement

C: Questionable landscape value. Recommend using a more desirable native replacement

D: Seldom used in landscaping. Recommend using a native replacement

E: Known to escape cultivation. Recommend using a native replacement

Avoid the Problem of Invasive Plants

Using native plants in landscapes avoids many environmental problems that result from using non-native plants. Some non-native plants that have been extensively used in landscaping over the years have escaped from cultivation and become established in nature. Non-native plants cause irreparable damage to natural landscapes, native plant communities and wildlife populations. Once these plants escape into the wild they continue to reproduce and spread unchecked. The aggressive spread and growth of invasive plants enables them to out-compete and displace native flora, forming large monocultures. The result is loss of wildlife, increased control and maintenance costs for individuals and communities and degradation of nature biological systems. These problems are compounded by continued use of these plants.

It is far more cost effective to prevent the escape and establishment of non-native invasive plants than it is to try to control the plants once they have escaped cultivation.

Native plants provide the same ornamental and landscape requirements as their non-native counterparts. Plants such as black chokeberry, bearberry and New Jersey tea can easily replace the non-natives with no loss of aesthetics. In many cases the native replacements have qualities that are more desirable.

Of note, laws have become more prescriptive as it relates to invasive species since the first publication of this manual. Read on for more details.

(Return to Table Of Contents)

Garlic Mustard; wordpress.com

Terrestrial Invasive Species in New York State

https://www.dec.ny.gov/animals/95383.html

Terrestrial invasive species are land-living organisms that negatively affect our communities, fields and forests. They can decrease our enjoyment of nature, increase the cost of living and even put our health at risk.

An unfortunate byproduct of world travel and trade is the introduction of unwanted invasive species. Shipping pallets and crates, luggage, the ballast water of boats and even people can unintentionally transport invasive plants, insects and diseases to new areas. Without knowing that they would become problematic, some species have been introduced intentionally for use in landscaping, agriculture and other purposes.

Invasive species impact all aspects of life, from recreation to livelihood. Spotted knapweed is an invasive plant that can take over crop fields, limiting crop production and feed for livestock. Hemlock woolly adelgid is an invasive insect that defoliates and kills hemlock trees, a key species in maintaining important habitat along waterways. Whether damaging the economy or the environment, invasive species can destroy the places we love and require costly solutions.

Before buying or relocating plants (or animals), check the NYS Regulated and Prohibited Invasive Species list. DEC officials finalized the list in 2014 and gave growers, landscapers and retailers until the spring of 2016 to comply with the regulation. For example, Japanese barberry is no longer for sale in New York nurseries as it has been found to spread to natural landscapes and quickly choke out native species. It is also prohibited to share or to transport. Burning bush is also regulated and no longer available at most nurseries. These plants are known to escape cultivation and invade natural areas throughout the northeast.

(Return to Table Of Contents)

Table 5: Non-native Trees, Shrubs, Wildflowers and Grasses Considered Invasive and should never be used in Landscape Plantings

Code	Latin Name	Common Name	Code	Latin Name	Common Name
Large Shade Trees			**Small Flowering Trees**		
B, C, E	Acer ginnala	Maple, Amur	B	Crataegus laevigata	Hawthorn, English
A, D	Acer platanoides	Maple, Norway	C, D, E	Prunus cerasifera	Plum, Cherry
A, D	Acer platanoides 'Crimson King'	Maple, Norway "Crimson King"	A	Pyrus calleryana	Pear, Bradford
A, D, E	Acer pseudoplatanus	Maple, Sycamore	A, D, E	Rhamnus frangula	Buckthorn, Glossy
B, C, E	Acer tartaricum	Maple, Tartarian	A, D, E	Rhamnus cathartica	Buckthorn, European
A, D, E	Ailanthus altissima	Tree of Heaven			
C, D, E	Alnus glutinosa	Alder, Black	**Shrubs**		
C, D, E	Koelreuteria paniculata	Golden rain tree	B, C, D	Akebia quinata	Fiveleaf Akebia
B, D, E	Maakia amurense	Maackia, Amur	A, C, D	Ampelopsis brevipedunculata	Porcelainberry
B, D, E	Paulownia tomentosa	Princess Tree	A	Berberis thunbergii	Barberry, Japanese
B, D, E	Phellodendron amurense	Corktree, Amur	A	Berberis vulgaris	Barberry, Common
B, D, E	Quercus acutissima	Oak, Sawtooth	C, D	Callicarpa dichotoma	Beautyberry, Purple
C, D, E	Salix babylonica	Willow, Weeping	C, D	Callicarpa japonica	Beautyberry, Japanese
C, D, E	Salix matsudana	Willow, Corkscrew	C, D	Caragana arborescens	Peashrub, Siberian
C, D, E	Sorbus acuparia	Mt Ash, Eurpean	A, C, E	Celasstrus scandens	Bittersweet, Oriental
C, D, E	Sorbus alnifolia	Mt Ash, Korean	C, D	Chaenomeles japonica	Quince, Japanese
C, D, E	Styphnolobium japonica	Japanese Scholar Tree	C, D	Chaenomeles speciosa	Quince, Flowering
B, D, E	Tilia tomentosa	Linden, Silver	C, D	Cornus sanguinea	Dogwood, Blood-twig
B, D, E	Ulmus parviflora	Elm, Chinese	C, D	Cotoneaster apiculatus	Cotoneaster, Cranberry
A, D, E	Ulmus pumilla	Elm, Siberian	C, D	Cotoneaster dammeri	Cotoneaster

A: Plant is invasive throughout the northeast. **D:** There are desirable native replacements.

B: Plant is invasive locally in the northeast. **E:** Is seldom used in landscaping.

C: Plant poses moderate to high risk of escape from cultivation.

Table 5: Non-native Trees, Shrubs, Wildflowers and Grasses Considered Invasive and should never be used in Landscape Plantings (cont'd)

Code	Latin Name	Common Name	Code	Latin Name	Common Name
Shrubs (cont'd)			C, D, E	Rhodotyphos scandens	Jetbead, Black
C, D	Cotonester horizontalis	Cotoneaster, Rock	C, D, E	Ribes alpinum	Currant, Alpine
C, D, E	Cytisus scopiarus	Scotch Broom	A, C, E	Rosa multiflora	Rose, Multiflora
A, C, D	Elaeagnus angustifolia	Olive, Russian	B, C, D	Rosa species	Species, Rose
A, C, D	Elaeagnus umbellata	Olive, Autumn	C, D, E	Salix alba	Willow, White
A, C, D	Euonymus alatus	Burning bush	C, D, E	Salix caprea	Pussywillow, French
A, C, D	Euonymus fortunei	Wintercreeper	C, D, E	Salix integra	Willow, Nishiki
A, C	Hedera helix	English Ivy	C, D, E	Salix species	Species, Willow
A, C, D	Ligustrum species	Privet	C, D	Sambucus nigra	Elder, European
A, C, D	Ligustrum vulgare	Privet, European	B, C	Spirea japoinca	Spirea, Japanese
A, C, D	Ligustrum x vicari	Privet, Golden	B, C, D	Viburnum opulus	Cranberry Bush, Eur.
A, C, D	Lonicera japonica	Honeysuckle, Japanese	B, C, D	Wisteria floribunda	Wisteria
A, C, D	Lonicera maackii	Honeysuckle, Amur	D, E	Prunus domestica	Plum, Prune
A, C, D	Lonicera morrowii	Honeysuckle, Morrow	Perennials		
A, C, D	Lonicera species	Honeysuckle	B, C, D	Adenophora lilifloria	Ladybells
A, C, D	Lonicera tartarica	Honeysuckle, Tartarian	A, C, D	Aegopodium podagraria	Bishopsweed, Goutweed
C, E	Nandina domestica	Bamboo, Heavenly	B, C, D	Ajuga reptans	Bugleweed
A, C	Pachysandra terminalis	Pachysandra, Japanese	B, C, D	Aster tartaricus	Tartarian Aster
A, C	Parthenocuissus tricuspidata	Ivy, Boston	B, C, D	Campanula glomerata	Bellflower, Clustered
C, D, E	Prunus x cistena	Sand Cherry, Purple	B, C, D	Campanula rapunculoldes	Bellflower, European
			B, C, D	Capanula species	Bellflower

A: Plant is invasive throughout the northeast. **D:** There are desirable native replacements.

B: Plant is invasive locally in the northeast. **E:** Is seldom used in landscaping.

C: Plant poses moderate to high risk of escape from cultivation.

Table 5: Non-native Trees, Shrubs, Wildflowers and Grasses Considered Invasive and should never be used in Landscape Plantings (cont'd)

Code	Latin Name	Common Name	Code	Latin Name	Common Name
B, C, D	Centaurea cyanus	Bachelor's Button, Cornflower	B, C, D	Symphytum 'Hidcote Blue'	Hidcote Comfrey
A, C, D	Chrysanthemum leucanthemum	Daisy, Oxeye	A, C, D	Vinca major	Vinca, Bigleaf Periwinckle
A, C, D	Chrysanthemum maximum	Daisy, Shasta	A, C, D	Vinca minor	Vinca,Small-leaf Periwinckle
A, C, D	Coronilla varia	Crown Vetch			
A, C, D	Covallaria majalis	Lilly of the Valley	GRASSES		
A, C, D	Hemerocallis fulva	Lilly, Day	B	Arundo donax	Giant Reed
A, C, D	Hesperis matronalis	Dames Rocket	B, C	Cortaderia selloana	Grass, Pampass
B, C, D	Impatiens balfourii	Balfour's Touch-me-not	B, C	Cortaderia jubata	Grass, Pampass
B, C, D	Lamiastrum galeobdolon	Yellow Archangel	C, D	Festuca ovina glauca	Sheep Fescue
A, C, D	Lathyrus odoratus	Sweet Pea	B, C, D	Leymus arenarius	Rye, Blue
C,D	Lychnis coronaria	Rose Campion	B, D	Liriope muscari	Lilly Turf
B, C	Lysimachia clethroides	Loosestrife, Gooseneck	B, C, D	Miscanthus sacchariflorus	Grass, Silver Banner
B, C	Lysimachia nummularia	Moneywort, Creeping Jenny	B, C	Miscanthus sinensis	Grass, Japanese Silver
A, D	Lythrum salicaria L	Loosestrife, Purple	B, C	Miscanthus sinensis var. purpurascens	Grass, Flame
C, D	Macleaya cordata	Plume Poppy	B, C	Pennisetum alopecuroides	Grass, Fountain
A, C, D	Myosotis sylvatica	Forget-me-not	B, C	Pennisetum orientale	Grass, Oriental Fountain
B, C, D	Ornithogalum umbellatum	Star of Bethlehem	B, C, D	Phalaris arundinacea	Grass, Ribbon
A, C, D	Pachysandra terminalis	Pachysandra, Japanese	A, C, D	Phalaris arundinacea	Grass, Reed Canary
A, C, D	Ranunculus ficaria	Lesser Celandine			
C, D	Stachys byzantina	Lamb's Ear			

A: Plant is invasive throughout the northeast. **D:** There are desirable native replacements.

B: Plant is invasive locally in the northeast. **E:** Is seldom used in landscaping.

C: Plant poses moderate to high risk of escape from cultivation.

Environmental Benefits of Plants

It is well known that the judicious use of plants in the landscape is a cost effective way to utilize the environmental benefits of plants. Proper selection of the right species and the correct siting of those plants should be considered during the early design stage of any project. The energy savings and environmental benefits of installing plants are accrued indefinitely, while the cost of installation occurs just once. Benefits tend to increase over time as the plants grow, while maintenance costs are low to non-existent.

Proper placement and orientation of trees in relation to buildings reduce air-conditioning requirements by shading them from direct sunlight. Peak summertime temperatures in parking areas, streets, sidewalks and other hard surface areas are significantly reduced by strategically planting shade trees.

Plants sited on the windward side of buildings function as an effective windbreak, significantly lowering wind speeds. Lower wind speeds save on heating costs by reducing heat loss from nearby buildings.

Wetland plants are extremely effective in managing storm water runoff. Swales, ditches and areas adjacent to hard surfaces that are planted with vegetation will reduce runoff, trap pollutants, lower flow speeds and increase infiltration. Bioengineered water control devices are far more cost effective in managing stormwater than man-made structures.

(Return to Table Of Contents)

Plant Survival

Awareness of soil problems before planting can prevent plant health problems later. Soil tests are recommended to determine soil type, pH, organic content and fertility. Tests should be taken after soil grading but before planting. Additional samples can be taken every three to five years thereafter to determine whether any nutrients are lacking. A soil test kit may be obtained from your county Extension office. This is an important step to maintaining the investment in green infrastructure.

Construction sites usually leave large areas backfilled and graded with highly disturbed subsoil, that is then covered with just a few inches of topsoil. These soils are deficient in the nutrients and organic matter necessary to support good plant growth and have poor soil structure. Soil amendments may be added to these soils to make them more suitable for sustaining plant growth. Plants selected for their tolerance to these difficult sites will help to reduce plant problems. Plants requiring moderate to high fertility will need good top soil or soils amended with organic matter. It is also important to keep newly planted trees watered and pruned and to keep weeds away from their bases to avoid excess stress.

Organic bark mulches are recommended for use under trees and shrubs. Inorganic mulch material such as stone chips, rubber chips or pebble mulches should never be used around plant material. Inorganic mulches provide none of the requirements for plant health and growth compared to organic mulches. Wood chip and dyed bark mulches are discouraged over the use of natural un-dyed bark mulches for the same reason.

(Return to Table Of Contents)

Plant Small

Smaller plants survive better and establish faster than larger plants and are more economical. To avoid having to remove plants as they mature, use annuals during the initial growing seasons to fill in blanks. Or, savings from using smaller plant material can be reinvested by using a greater number of plants. What does smaller mean? Trees can be planted at 1″ to 1½″ caliper, shrubs in 1 - 3 gallon containers and perennials in 1 - 2 gallon pots.

Smaller plants suffer less transplant shock; lower root to shoot ratios encourage quicker establishment in the existing soils and more rapid growth. Smaller containers and trees may be produced in one to two years making it easier to acquire plant material. It may take two years to several years to grow the larger plant material. Supplies of larger native plant material may not be readily available.

(Return to Table Of Contents)

Create Three-dimensional Landscapes

Too often aesthetics and visual appeal are the only design factors given consideration. Choice of native plants, placement of plants in the landscape and arrangement of plants in relationship to each other, collectively, determines how much benefit native plants will contribute to overall wildlife habitat. Placement of plants in the landscape is just as important as choosing the right species. Designers should take into account other environmental and ecological factors when creating a landscape design, such as plant density, plant communities, sun exposure, soil structure and drainage patterns.

Focusing on the way plants are placed in the landscape will not only satisfy the aesthetic requirements of a landscape but also meet the survival needs of the plants and the habitat requirements of wildlife. By understanding how birds and animals use vegetation, it will be easier to incorporate their needs into the landscape. Wildlife requires vegetative cover for nearly every activity, such as feeding, resting and raising young. The denser and more extensive the cover, the better the habitat is and more wildlife it will support. Create connectivity between plantings so wildlife can move from one area to another under the protection of cover. The soil surface should always be covered with plants to prevent erosion and soil pollution.

(Return to Table Of Contents)

New Ways to Use Trees in the Landscape

Changing the way trees are planted and placed in the landscape will help meet their long-term survival needs, keep them healthier and provide greater ecological benefits. The common practice of planting ‘specimen trees’ in the landscape surrounded by turf grass runs contrary to the normal forest environment where trees grow naturally. Trees have evolved to grow in close proximity to each other, interspersed with other woody shrub species.

- Plant trees in groups instead of as individual trees.
- Plant shade trees in clusters or groupings of a few to a dozen or more trees.
- Groupings can consist of individual species or mixed species.

- Surround each tree or group of trees with a large mulch ring. Install a mulch ring that surrounds the whole group and covers the entire space under and between the trees. Ideally, a mulch ring should extend to the drip line of the tree or beyond.
- Install flowering trees, shrubs and perennials under and between the larger trees.

(Return to Table Of Contents)

Combine Plants of Different Heights and Growth Habits

- Combine plants of different species, growth habits and mature heights to more closely mimic what occurs in nature and create a more biologically diverse landscape.
- All tree groupings should consist of mixed plantings. Shrubs, perennials and small flowering trees can be inter-planted amongst the larger shade trees.
- A single tree can have its mulch ring planted with low shrubs or perennials or a mixture of both. This functions like a ground cover, leaving little room for weeds to grow thereby requiring less mulch and labor to maintain.

(Return to Table Of Contents)

Replace Lawn with Meadow

It is a common landscape practice to maintain large open areas of turf by mowing. Maintaining large areas in turf is wasteful and an unnecessary use of labor, fuel and equipment.

Converting mowed turf to a low-maintenance no-mow policy or establishing a wild-flower meadow will save money on maintenance. A meadow will cover large open areas in a way that is aesthetically acceptable to the public but requires little maintenance. Installing a meadow requires the knowledge and experience of an expert. Seek professional help on the specific steps and processes involved in developing a meadow habitat.

Whether starting from bare soil or established turf, determine the minimum area you need to maintain by mowing. Choose a plant community that will meet the short term and long-term uses for the land.

Here is a basic framework for establishing a meadow that is aesthetically pleasing to the public:

- Choose about six to 12 hardy species of colorful perennial wildflowers and two to four species of native grasses that are easy to establish, are vigorous growers and are long-lived. Establish a few dominant wildflower species that will make the meadow explode with color. These plants will contribute color and ornamental interest to the planting. Other secondary species can be added over time. A suggested list of plants is given in Table 6.

- Surround the meadow with a mowed strip to define the natural meadow from the surrounding managed area. Maintaining a defined boundary between natural and managed spaces conveys the message that the meadow is intentional and not the result of neglect. Develop a maintenance program that will maintain the meadow in an ecologically sustainable way.

- Plant groups of ornamental shrubs and trees around the perimeter of the meadow and a few groups in the center. A meadow with groups of woody plants is more visually acceptable than a meadow with only grasses and perennials. The trees and shrubs draw the focus away from the low meadow vegetation. This is especially effective during winter when the meadow plants are dormant.

(Return to Table Of Contents)

Photobotanic.com

Table 6: Native Wildflowers, Grasses and Shrubs for Use in a Meadow Planting

Meadow Shrubs			**Meadow Plants, cont'd**	
Common Name	**Latin Name**		**Common Name**	**Latin Name**
Black Elderberry	Sambucus canadensis		Clover, White Prairie	Dalea candida
Chokecherry	Prunus virginiana		Coneflower, Eastern	Rudbeckia fulgida
Dogwood, Silky	Cornus amomum		Coneflower, Pale Purple	Echinacea pallida
Hazelnut, Beaked	Corylus cornuta		Coneflower, Purple	Echinacea purpurea
Nannyberry	Viburnum lentago		Coneflower, Yellow	Echinacea paradoxa
Serviceberry Alleghany	Amelanchier laevis		Coreopsis, Lanceleaf	Coreopisis lanceolata
Spice Bush	Lindera benzoin		Goldenrod, ohio	Solidago ohioensis
Viburnum, Arrowwood	Viburnum dentatum		Goldenrod, Showy	Solidago speciosa'
			Hyssop, Lavender	Agastache foenicul um
Meadow Plants			Indigo, Blue False	Baptisia australis
Aster, New England	Aster novae-angliae		Indigo, Cream False	Baptisia bracteata
Aster, New York	Aster novi-belgii		Indigo, White False	Baptisia lactea
Aster, Sky Blue	Aster azureus		Milkweed, Red	Asclepias incarnata
Aster, Smooth	Aster laevis		Nodding Pink Onion	Allium Cernuum
Bee Balm	Monarda didyma		Sunflower, Ox Eye	Heliopsis helianthoides
Bergamot, Wild	Monarda fistulosa		Tickseed, Threadleaf	Coreopsis verticillata
Black-Eyed Susan	Rudbeckia hirta			
Blazing Star, Northern	Liatris borealis		**Grasses**	
Blazing Star, Prairie	Liatris pycnostachya		Canada Wild Rye	Elymus canadensis
Blazing Star, Rough	Liatris aspera		Indian Grass	Sorghastrum nutans
Brown Eyed Susan	Rudbeckia triloba		Little Bluestem	Schizachyrium scoparium
Butterflyweed	Asclepias tuberosa		Prairie Dropseed	Sporobolus heterolepis
Clover Pale Purple Prairie	Dalea purpurea		Sideoats Gramma	Bouteloua curtipendula

Plants for Water Control Structures

Storm-water treatment features such as retention, detention and infiltration basins, rain gardens swales and bio-filters should be covered with native vegetation. Covering with native vegetation will reduce maintenance, enhance landscape aesthetics, increase the design function and create high value wildlife habitat.

Water control structures (WCS) may be inundated with water for long periods of time. They may have muddy soils, have steep slopes or be lined with rock, preventing the usual practice of managing vegetation by mowing. Unplanted water control features are quickly invaded by aggressive species like phragmites and cattails. Planting with native vegetation will reduce or eliminate both of these problems.

Native wetland vegetation is ideally suited for controlling storm-water runoff and improving water quality that enhances the function of the WCS. The dense root system and stems will slow water runoff, increase infiltration, and trap sediment from the water column. Biological activity in the plants and sediments will help break down and degrade pollutants. Plants absorb and remove nutrients from the water.

Choose shrub and herbaceous wetland species adapted for the different water levels in the WCS.

Select plant material that provides color and interest over an extended period. Select a combination of woody and perennial plants that combine the best attributes of both groups of plants. Shrubs provide multi-season interest, especially during winter, and grow taller than perennial plants. Perennials provide more plant diversity, adding to the diversity of foliage, flower, size and structure.

(Return to Table Of Contents)

Rain gardens – An Effective Alternative to Managing Stormwater

Rain gardens are one of the simplest and most effective ways to “green” your landscape and manage storm-water. A rain garden is a shallow, planted depression that absorbs the water that flows from your roof, patio or yard, allowing it to drain directly into the soil. By building a rain garden, you can divert water from impervious surfaces in your landscape into an attractive planting bed that works like a sponge and natural filter to clean the water and let it percolate slowly into the surrounding soil.

Installing a rain garden is not difficult if you're willing to dig or you bring in machines to help. Consult your local Cooperative Extension Office for specifics about soil mix, garden size, and plants for your area. Your local extension

office will have information to help you size a rain garden to suit rainfall patterns typical in your area. The ideal size might be smaller than you expect.

Seek advice about initial construction and the types of plants to use. Group plants in zones, based on how well they tolerate having "wet feet". Plants that thrive in the wettest environment go in the center of the rain garden; that area tends to stay wet the longest after a storm. Put plants that can handle standing water on the sloping sides, and those that are suited to drier conditions on the edges.

Once the plants are in the ground, cover the inside of the rain garden with a 3-inch layer of mulch to keep the soil moist and to prevent weed seeds from sprouting. Until a rain garden's plants are established, even drought-tolerant plants require supplemental watering to survive dry seasons. Check the mulch depth annually and replenish as necessary. Rain gardens do not require fertilizers beyond the compost used in the soil mix. Weed and prune to keep the rain garden looking its best.

Rain Garden; Pinterest.com

Table 7: Native Wetland Plants and Shrubs for Use in Managing Storm Water Runoff

Wetland Shrubs			**Wetland Perennials**	
Common Name	**Latin Name**		**Common Name**	**Latin Name**
Black Chokeberry	Aronia melanocarpa		Bee Balm	Monarda didyma
Black Elderberry	Sambucus Canadensis		Boneset	Eupatorium perfoliatum
Button Bush	Cephalanthus occidentalis		Culvers Root	Veronicastrum virginicum
Dogwood, Grey	Cornus racemose		Hardy Ageratum	Ekupatorium coelestinum
Dogwood, Red Twig	Cornus sericea		Iris, Blue Flag	Iris versicolor
Dogwood, Silky	Cornus amomum		Joe-Pye Weed, Purple	Eupatorium purpureum
Nannyberry	Viburnum lentago		Joe-Pye Weed, Spotted	Eupatorium maculatum
Spice Bush	Lindera benzoin		Joe-Pye Weed, Tall	Eupatorium fistulosum
Steeplebush	Spirea tomentosa		Lobelia, Great Blue	Lobelia siphilitica
Viburnum, Arrowwood	VIburnum dentatum		Rose Mallow	Hibiscus palustris
Viburnum, Winterthur	Viburnum nudum		Swamp Milkweed	Asclepias Incarnata
Viburnum, Witherood	Viburnum cassinoldes		Tall Meadow Rue	Thalictrum dasycarpum
Willow, Heart-leaved	Salix eriocephala		Vervain, Blue	Verbena hastata
Willow, Pussy	Saliix dicolor		White Snakeroot	Eupatorium rugosum
Willow, Sandbar	Salix exigua		**Rushes**	
Willow, Shining	Salix lucida		Bulrush, Hard stemmed	Scirpus acutus
Willow, Silky	Salix sericea		Bulrush, Soft Stemmed	Scirpus validus
Winter Berry	Ilex verticillata		Giant Burreed	Sparganium eurycarpum

The Right Plant for an Impossible Site

Choosing the right plant for a difficult site is the first consideration to avoid future plant problems. It is even more critical when selecting plants for extreme environments. Parking lot islands and tree pits are two of the most challenging planting sites. They often have extreme temperatures and limited soil moisture due to impermeable surfaces. Soils are typically compacted, of poor quality and have a high pH. Table 8 lists some native plants with high tolerance to extreme environmental conditions.(Return to Table Of Contents)

Table 8: Durable Plants for Extreme Environments

Species name	Common Name	Tolerances
Shrubs for extreme environments		
Arcto staphylos uva-ursi	Bear Berry	poor soils, drought
Aronia arbutifolia	Red Chokeberry	poor soils, drought, + pH
Aronia melanocarpa	Black Chokeberry	poor soils, drought, + pH
Ceanothus americanus	New Jersey Tea	poor soils, drought, + pH
Comptonia peregrina	Sweet Fern	poor soils, high temp, drought
Cornus racemosa	Grey Dogwood	poor soils, high temp, drought, + pH
Cornus rugosa	Rooundleaf Dogwood	poor soils, high temp, drought, + pH
Diervilla lonicera	Bush Honeysuckle	poor soils, drought, + pH
Hypericum frondosum	St Johnswort	poor soils, high temp, drought, + pH
Ilex glabra	Inkberry	drought, salt, + pH
Juniperus communis	Common Juniper	poor soils, high temp, drought, + pH
Juniperus horizontalis	Creeping Juniper	poor soils, high temp, drought, + pH
Juniperus scopulorum	Rocky Mountain Juniper	poor soils, high temp, drought, + pH
Myrica pennsylvanica	Bayberry	poor soils, high temp, drought, + pH, salt
Potentilla fruticosa	Potentilla	drought, + pH
Prunus pumilla	Sand Cherry	poor soils, high temp, drought, salt
Rhus aromatica	Fragrant Sumac	poor soils, high temp, drought, + pH
Small trees for extreme environments		
Amelanchier canadensis	Shadblow Serviceberry	poor soils, drought, + pH
Amelanchier laevis	Alleghany Serviceberry	drought, + pH
Cotinus obovatus	American Smoketree	drought, + pH
Craetagus species	Hawthorn	poor soils, drought, + pH
Prunus virginiana	Chokecherry	poor soils, drought, + pH

Table 8: Durable Plants for Extreme Environments (cont'd)

Species name	Common Name	Tolerances
Large trees for extreme environments, continued		
Acer nigrum	Black Maple	drought + pH
Betula lenta	Sweet Birch	drought
Betula nigra	River Birch	drought, + pH
Carya cordiformis	Bitternut Hickory	poor soils, drought
Carya ovata	Shagbark Hickory	poor soils, drought
Celtis occidentalis	Hackberry	drought + pH
Gleditsia triocanthus inermis	Honey Locust	poor soils, drought, + pH, salt
Gymnocladus dioicus	Kentucky Coffee Tree	poor soils, drought, + pH, salt
Nyssa sylvatica	Black Gum	drought, salt
Ostrya virginiana	Hophornbeam	drought, + pH
Quercus bicolor	Swamp White Oak	drought
Quercus imbricaria	Shingle Oak	drought
Quercus macrocarpa	Burr Oak	poor soils, drought, + pH
Quercus muehlenbergii	Chinkapin Oak	drought, + pH
Quercus rubra	Red Oak	drought
Tilia americana	American Linden	drought, + pH
Ulmus americana	American Elm	drought, + pH

White Birch; rutgersin.com

Biodiversity and Pest Control

Biodiversity in the landscape reduces pest problems. Research has shown that plant monoculture and simple landscapes with less structure result in more pest problems. Simple ecological systems are subject to disruptions and population peaks and valleys that complex systems are not.

A landscape containing only a few species of plants will also have fewer species of beneficial insects (insect predators) that keep insect pests (insect herbivores) in check. Insect pests reproduce very quickly, allowing their populations to explode. Insect predators, on the other hand, reproduce slowly. In the absence of predators, the herbivore population increases rapidly. The predators will also begin to reproduce but they cannot reproduce fast enough to keep pace with the pest outbreak. The difference in reproductive potential between predator and prey creates population peaks and valleys that translate into pest outbreaks.

A landscape with a diversity of plant species creates a more complex physical environment that supports a diversity of predator species. In complex systems, there are more plant species. Each plant species will have its own unique compliment of herbivores and the insect predators that feed on them. If one pest begins to increase in number, there are more species of insect predators that can begin to prey on that population and hold its population in check. When that population declines, the predators can then shift to another prey species. This allows the population of predators to remain higher and more diverse than in a simplified system.

Each insect species has certain habitat requirements it needs to survive. Some beneficial insects live part or all of their life in the soil, while others species may live in the tree canopy. One species may over-winter in the cracks and fissure of tree bark, while another may burrow into a plant stem for winter protection. Eliminate any one of those habitat features and that species is removed from the habitat.

Using more native species from different plant families and covering large areas with plants will create the complex environment that keeps insect pests under control.

(Return to Table Of Contents)

Conclusion

Following Town of Victor Conservation Board recommendations, the Town Planning Board demonstrated support for use of native plants in development landscapes by adding specific requirements to Town Design and Construction Standards. Landscape architects that work in the Town are not surprised by the requirements; in fact, most support the concept and recognize the benefits of moving away from non-native plants. This manual is intended to facilitate the process as well as educate those who are at a loss as to where to begin.

Using native species supports a healthy ecosystem in our town, and residents see the benefits: e.g., landscapes with unique qualities rather than a rubberstamp approach to design, natural appearance, increase in birds and butterflies, increased survival rate of plants and reduction of time and money spent on home landscapes.

As demand continues to increase for native vegetation, suppliers large and small will take steps to supply the product. It is a priority to prevent the disappearance of native species from New York State and to encourage biodiversity. The intent is to restore plant and animal habitats throughout the Town. In addition, use of native plants contributes to "green infrastructure", the interconnected network of natural areas and other open spaces that conserves natural ecosystem values and functions, that sustains clean air and water, and that provides a wide array of benefits to people and wildlife.

(Return to Table Of Contents)

Trillium; pinterest.com